

Autodesk Inventor®

autodesk®

Hands-on Test Drive

9

Autodesk Inventor® 9

Autodesk, Inc.
111 McInnis Parkway
San Rafael, CA 94903, USA
Tel.: +1/415-507 5000
Fax: +1/415-507 5100

Autodesk (Europe) S.A.
20, route de Pré-Bois
Case Postale 1894
CH-1215 Geneva 15
Switzerland
Tel.: +41/22-929 75 00
Fax: +41/22-929 75 01

Autodesk Asia PTE Ltd.
391B Orchard Road
#12-06 Ngee Ann City, Tower B
Singapore 238874
Singapore
Tel.: +65/6461-8100
Fax: +65/6735-5188

Autodesk Limited
1 Meadow Gate Avenue
Farnborough
Hampshire GU14 6FG
United Kingdom
Tel.: +44/1252 456600
Fax: +44/1252 456601

www.autodesk.com

Autodesk Inventor 9 Hands-on Test Drive

000000000000114298

© Copyright 2004 Autodesk, Inc.

All Rights Reserved

This publication, or parts thereof, may not be reproduced in any form, by any method, for any purpose.

AUTODESK, INC. MAKES NO WARRANTY, EITHER EXPRESSED OR IMPLIED, INCLUDING BUT NOT LIMITED TO ANY IMPLIED WARRANTIES OF MERCHANTABILITY OR FITNESS FOR A PARTICULAR PURPOSE, REGARDING THESE MATERIALS AND MAKES SUCH MATERIALS AVAILABLE SOLELY ON AN "AS-IS" BASIS.

IN NO EVENT SHALL AUTODESK, INC. BE LIABLE TO ANYONE FOR SPECIAL, COLLATERAL, INCIDENTAL, OR CONSEQUENTIAL DAMAGES IN CONNECTION WITH OR ARISING OUT OF PURCHASE OR USE OF THESE MATERIALS. THE SOLE AND EXCLUSIVE LIABILITY TO AUTODESK, INC., REGARDLESS OF THE FORM OF ACTION, SHALL NOT EXCEED THE PURCHASE PRICE OF THE MATERIALS DESCRIBED HEREIN.

Autodesk, Inc. reserves the right to revise and improve its products as it sees fit. This publication describes the state of this product at the time of its publication, and may not reflect the product at all times in the future.

Autodesk Trademarks

The following are registered trademarks of Autodesk, Inc., in the USA and/or other countries: 3D Props, 3D Studio, 3D Studio MAX, 3D Studio VIZ, 3DSurfer, 3ds max, ActiveShapes, ActiveShapes (logo), Actrix, ADI, AEC Authority (logo), AEC-X, Animator Pro, Animator Studio, ATC, AUGI, AutoCAD, AutoCAD LT, AutoCAD Map, Autodesk, Autodesk Envision, Autodesk Inventor, Autodesk (logo), Autodesk Map, Autodesk MapGuide, Autodesk Streamline, Autodesk University (logo), Autodesk View, Autodesk WalkThrough, Autodesk World, AutoLISP, AutoSketch, backdraft, Biped, bringing information down to earth, Buzzsaw, CAD Overlay, Character Studio, Cinepak, Cinepak (logo), cleaner, Codec Central, combustion, Design Your World, Design Your World (logo), EditDV, Education by Design, gmax, Heidi, HOOPS, Hyperwire, i-drop, Inside Track, IntroDV, Kinetix, MaterialSpec, Mechanical Desktop, NAAUG, ObjectARX, PeopleTracker, Physique, Planix, Powered with Autodesk Technology (logo), ProjectPoint, RadioRay, Reactor, Revit, Softdesk, Texture Universe, The AEC Authority, The Auto Architect, VISION*, Visual, Visual Construction, Visual Drainage, Visual Hydro, Visual Landscape, Visual Roads, Visual Survey, Visual Toolbox, Visual Tugboat, Visual LISP, Volo, *WHIP!*, and *WHIP!* (logo).

The following are trademarks of Autodesk, Inc., in the USA and/or other countries: AutoCAD Learning Assistance, AutoCAD LT Learning Assistance, AutoCAD Simulator, AutoCAD SQL Extension, AutoCAD SQL Interface, AutoSnap, AutoTrack, Built with ObjectARX (logo), burn, Buzzsaw.com, CAiCE, Cinestream, Civil 3D, cleaner central, ClearScale, Colour Warper, Content Explorer, Dancing Baby (image), DesignCenter, Design Doctor, Designer's Toolkit, DesignProf, DesignServer, Design Web Format, DWF, DWFit, DWG Linking, DXF, Extending the Design Team, GDX Driver, gmax (logo), gmax ready (logo),Heads-up Design, jobnet, lustre, ObjectDBX, onscreen onair online, Plans & Specs, Plasma, PolarSnap, Productstream, Real-time Roto, Render Queue, Visual Bridge, Visual Syllabus, and Where Design Connects.

Autodesk Canada Inc. Trademarks

The following are registered trademarks of Autodesk Canada Inc. in the USA and/or Canada, and/or other countries: discreet, fire, flame, flint, flint RT, frost, glass, inferno, MountStone, riot, river, smoke, sparks, stone, stream, vapour, wire.

The following are trademarks of Autodesk Canada Inc., in the USA, Canada, and/or other countries: backburner, Multi-Master Editing.

Third Party Trademarks

HTML Help © 1995-2002 Microsoft Corp. All rights reserved.

Internet Explorer © 1995-2001 Microsoft Corp. All rights reserved.

Windows NetMeeting © 1996-2001 Microsoft Corp. All rights reserved.

TList™ 5 Active X control, Bennet-Tec Information Systems.

Typefaces © 1992 Bitstream typeface library. All rights reserved.

Visual Basic and Visual Basic logo (graphic only) © 1987-2001 Microsoft Corp. All rights reserved.

Third Party Copyright Notices

2D DCM, CDM, and HLM are trademarks of D-Cubed Ltd. 2D DCM © Copyright D-Cubed Ltd. 1989-2004. CDM © Copyright D-Cubed Ltd. 1999-2004. HLM © Copyright D-Cubed Ltd. 1996-2004.

ACIS® Copyright © 1989-2001 Spatial Corp. Portions Copyright © 2002-2004 Autodesk, Inc.

COPRA MetalBender © 1989-2002 data M Software GmbH. All rights reserved.

dBASE is a registered trademark of Ksoft, Inc.

Intel ® Math Kernel Library, Copyright © 1999-2003 Intel Corporation. All Rights Reserved.

MD5C.C - RSA Data Security, Inc., MD5 message-digest algorithm © 1991-1992

Objective Grid © 2002 Stingray Software, a division of Rogue Wave Software, Inc. All rights reserved.

RSA Data Security, Inc. Created 1991. All rights reserved.

SafeCast © 1996-2002 and FLEXlmë™ © 1988-2002 Macrovision Corp. All rights reserved.

SMLib © 1998-2003 IntegrityWare, Inc., GeomWare, Inc., and Solid Modeling Solutions, Inc. All rights reserved.

Typefaces © 1996 Payne Loving Trust. All rights reserved.

uuencode/uudecode © 1983 Regents of the University of California. All rights reserved.

Wise for Windows Installer © 2002 Wise Solutions, Inc. All rights reserved.

Portions of this software are based in part on the work of the Independent JPEG Group.

Portions of this software © 1981-2003 Microsoft Corp.

Portions of this software © 1992-2002 ITI. TList ActiveX control licensed from Bennet-Tec Information Systems.

This software contains Macromedia Flash Player software by Macromedia, Inc., copyright © 1995-2002 Macromedia, Inc. All rights reserved. Macromedia and Flash are either registered trademarks or trademarks of Macromedia, Inc.

All other brand names, product names or trademarks belong to their respective holders.

GOVERNMENT USE

Use, duplication, or disclosure by the U. S. Government is subject to restrictions as set forth in FAR 12.212 (Commercial Computer Software-Restricted Rights) and DFAR 227.7202 (Rights in Technical Data and Computer Software), as applicable.

Contents

Getting the Most from Your 30-Day Trial Version	*3*
Getting Started	*6*
Creating Your First Part	*12*
Entering the Third Dimension	*16*
Creating Another Sketch	*17*
Constraining a Sketch	*20*
Using More 3D Part Modeling Tools	*25*
Completing the Part Design	*28*
Creating a Production Drawing	*35*
Working with Multiple Parts in an Assembly	*41*
Using Standard Parts	*47*
Animating the Assembly	*50*
Creating an Assembly Drawing	*53*
Making Revisions to the Design	*59*
Reusing Your Existing 2D Design Data	*64*
Designing Welded Assemblies	*73*
Testing the Steering Mechanism	*77*
Creating a Sheet Metal Design	*78*
Autodesk Manufacturing Solutions	*87*
Conclusion	*93*

Dear Design Professional,

Welcome to the Autodesk Inventor® 9 Hands-on Test Drive!

You are about to see why Autodesk Inventor software is the best choice for 3D mechanical engineering and design. It may seem like ordinary design software, but look more closely. Autodesk Inventor gives you more tools and more power for creating quality products and accelerating your design cycle.

With Autodesk Inventor, you have the power to

- Design your entire product line
- Create quality products
- Deliver designs in less time
- Get to production-ready drawings more quickly
- Communicate and manage design data

If you're considering a move to 3D software, this hands-on test drive will help you learn more about a risk-free migration strategy that takes advantage of the latest 3D design tools, and makes the most of the investment you have in existing 2D drawings you still depend on today. You will also see that Autodesk Inventor offers an intuitive workflow and simplified user interface allowing you to be productive from day one.

In the following pages, you will participate in the design of a go-cart. Using Autodesk Inventor 9, you will

- Create 2D sketches
- Convert 2D sketches to 3D parts
- Create a detail drawing of a 3D part
- Create an adaptive assembly of individual parts
- Animate an assembly
- Create an assembly drawing with balloons and a parts list
- Convert an AutoCAD drawing file (DWG) to a 3D part
- Create a welded assembly
- Create a sheet metal part

After you complete the hands-on portion of this test drive, you will see that Autodesk offers a complete solution for manufacturers, including the most innovative 2D and 3D design tools and the only practical data management solution on the market. Working with Autodesk software, you'll use design data to accelerate product development cycles, collaborate more efficiently with manufacturing partners, and, in the end, get better-quality products to market faster.

Thank you for your interest in Autodesk Inventor. We hope this 30-day trial version offers you an opportunity to experience how much fun 3D mechanical design can be.

The Autodesk Inventor Team

Getting the Most from Your 30-Day Trial Version

System Requirements

These are the recommended system requirements for the Autodesk Inventor 9 trial version:

- Microsoft® Windows® XP Professional or Home Edition (SP1), Microsoft® Windows® 2000 Professional (SP3 or later)
- Intel® Pentium III, Pentium 4, Xeon™, or AMD Athlon™, 1 GHz or better processor (1.8 GHz or better processor preferred for assemblies with 1,000 or more parts)
- 512+ MB RAM (1.0–3.5 GB RAM preferred)
- 64 MB OpenGL–capable graphics card recommended (64+ MB OpenGL–capable workstation class graphics card preferred for assemblies with 1,000 or more parts)
- 2 GB free hard drive space (for product and content libraries)
- Microsoft® Internet Explorer 6 or later
- Microsoft® Excel 97 (2000 or XP preferred) for iParts, iFeatures, and spreadsheet-driven designs
- NetMeeting 3.01 or later for web-collaboration

Note: Less capable machines can run Autodesk Inventor 9, but the results will be less than ideal.

Installation of Software and Sample Data

Follow these steps to install your Autodesk Inventor trial version and the sample files for the go–cart:

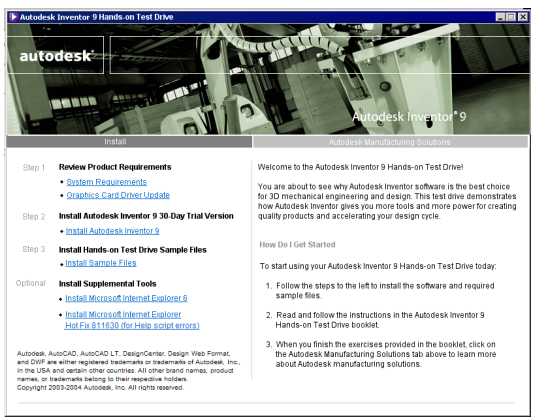

1. Close all open applications.
2. Insert the CD (on the back cover of this booklet) into the CD-ROM drive and follow the onscreen instructions.
3. If the CD does not start automatically, go to ***D:\testdrv.exe*** (where D is the CD-ROM drive), and double-click the file testdrv.exe.
4. On the Install page, follow the steps to
   - Review the product requirements
   - Install the Autodesk Inventor 30-day trial version
   - Install the sample files for the go–cart
   - Install supplemental tools (optional)

Install the Autodesk Inventor 9 30-Day Trial Version

To install the Autodesk Inventor 9 30-day trial version:

1. In the Install screen, click the **Install Autodesk Inventor 9** link and follow the instructions onscreen.

2. Click the **Next** button in the first dialog box.

3. Read the licensing agreement, confirm by clicking **Accept**, and then click **Next.**

4. In the following dialog box, select **Single-User License**, select **Install Autodesk Inventor as a 30 Day Trial**, and then click **Next.**

5. In the following dialog box, enter your user information, and then click **Next.**

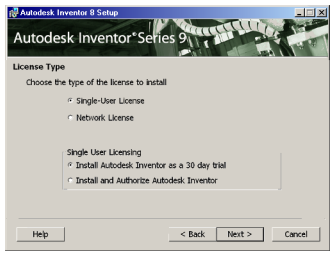

To define the installation path and installation type:

1. Click **Next** to accept the default destination folder, or click **Browse** to define an alternate folder location.

2. In the following dialog box, click **Next** to accept the default installation type option **Complete.**

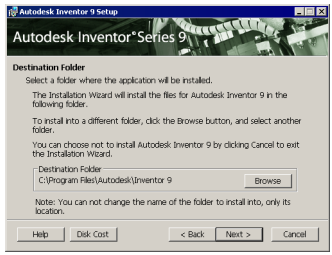



To define the measurement units and drawing standards and finish the installation:

1. Select **Millimeters** as the standard unit of measurement, select **ISO** as the drawing standard, then click **Next.**

   Note: Although this booklet uses the ISO drawing standard, Autodesk Inventor supports ANSI and other common drawing standards.

2. In the following dialog box, select the **Enable part modification from within drawings** and **Enable Content Library modification** options and then click **Next.**

3. In the last dialog box, click **Next** to start the installation.

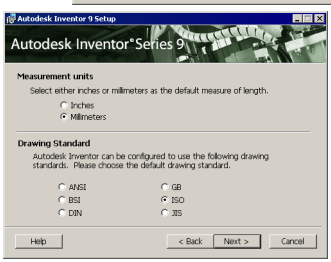

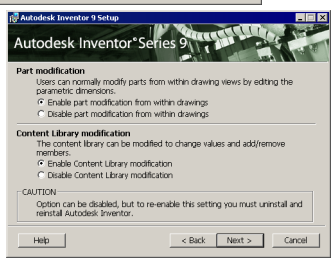

Install the Hands-on Test Drive Sample Files

After installing the Autodesk Inventor trial version, you need to copy the sample files for the go–cart from the CD to your computer.

- To copy the sample files, select the **Install Sample Files** link and follow the onscreen instructions.

Note: We highly recommend installing the files in the folder *C:\Inventor_R9_TestDrive*. This is the default location for the Autodesk Inventor test drive data.

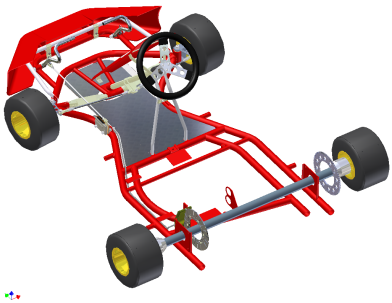

Autodesk Manufacturing Solutions

Only Autodesk offers a complete manufacturing solution that includes the most innovative 2D and 3D design products and practical data management tools that you need to streamline your entire design process.

After you finish the hands-on portion of this test drive, you can learn more about Autodesk manufacturing solutions by clicking the links on the Autodesk Manufacturing Solutions screen.

Supplemental materials, including links to an electronic color version of this booklet (.pdf) and the Autodesk Inventor 9 Readme (.txt), are also available on this screen.



Using this Booklet

Although you can use this test drive at your own pace, these materials are intended for use in a reseller-led workshop environment. To optimize learning, your reseller will guide you through the exercises.

You should be able to complete this test drive in approximately 4 hours. For convenience, you will find copies of the parts that you design in this test drive in the *Workspace\Finished_Parts* folder, enabling you to skip sections if you want. Additionally, the last four sections of this test drive that focus on reusing your existing 2D design data, designing welded assemblies, testing the steering mechanism, and creating a sheet metal design are optional.

For more information or assistance using this test drive, contact your Autodesk Authorized Reseller.

Getting Started

To ensure the best possible performance and graphical representation of your work, we recommend that you use the following system settings.

Optimizing Your Graphics Settings

To optimize the graphics settings on your system:

1. **Right-click** in the Windows desktop and choose **Properties.**
2. In the Display Settings dialog box, click the **Settings** tab.
3. Select **True Color**, and then click **OK.**

Setting the Default Color Scheme

Autodesk Inventor software offers many different color schemes. For your first experience using Autodesk Inventor, we recommend using a simple color scheme with a white background.

1. To start Autodesk Inventor, **double-click** the Autodesk Inventor 9 application icon on the desktop.
2. Click **Cancel** in the lower-right corner of the Getting Started window to close this window.
3. From the **Tools** menu, choose **Application Options**.
4. On the **Colors** tab, choose the **Presentation** color scheme.
5. For those using less powerful machines or laptop systems, we also recommend that you **clear** the **Show Reflections and Textures** check box.
6. Click **Apply** and then click **OK** to close the Options dialog box.
7. To quit Autodesk Inventor, from the **File** menu, choose **Exit.**

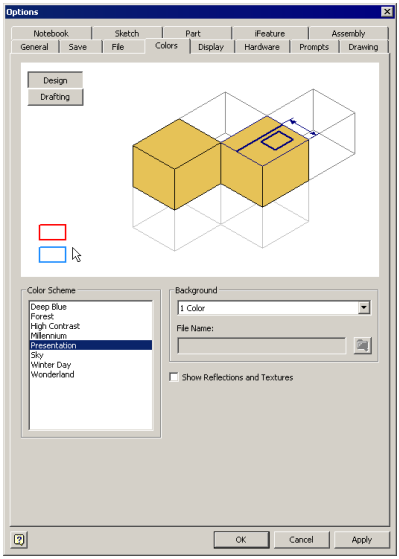

For more information about graphics card settings, visit **www.autodesk.com/us/inventor/graphic_cards.**

Help the Project Team Design a Go–Cart

Before you start Autodesk Inventor software, we want to tell you about what you can learn from this booklet and invite you to join our go–cart project team. The complete design of the go–cart is shown on the right.

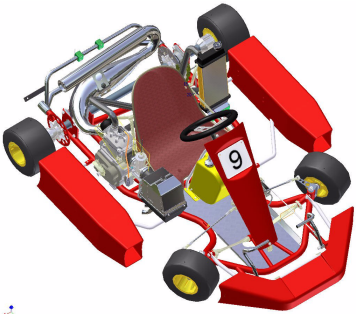

For this test drive, you work with a subset of the full go–cart assembly, as shown on the right. Most of the design focuses on the rear axle assembly.

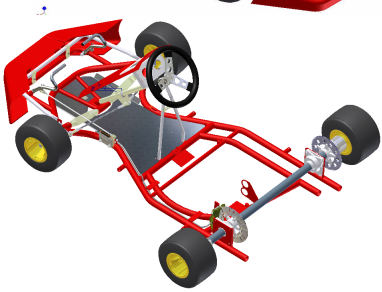

First, you design a carrier for the sprocket on the rear axle. During the design of the carrier, you become familiar with the following features:

- Sketching
- 3D part modeling
- Part drawing creation
- Adaptive design techniques

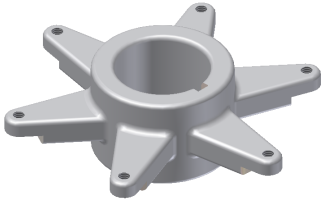

After you finish designing the carrier, you place the part in the assembly and become familiar with:

- Assembly modeling
- Assembly animation
- Assembly drawing creation

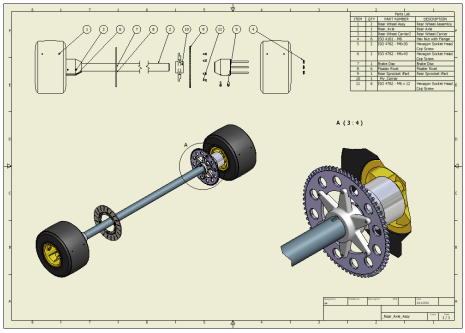

Later in this test drive, you also have the option to explore the following:

- Reusing 2D AutoCAD® drawings
- Weldment design
- Sheet metal design

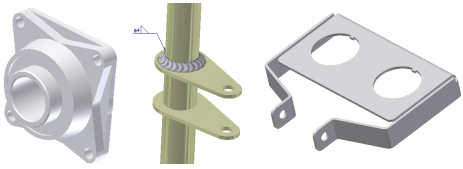

Starting Autodesk Inventor

To start Autodesk Inventor:

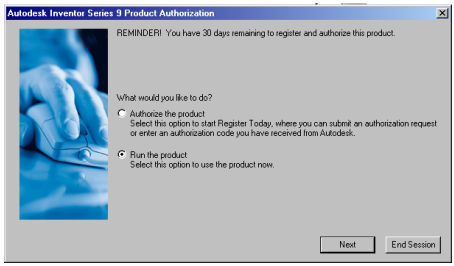

1. **Double-click** the Autodesk Inventor 9 application icon on the desktop.

   The Authorization dialog box is displayed with a reminder of the number of days remaining for your trial version of Autodesk Inventor.

2. Select the **Run the product** option, and then click **Next**.



The Getting Started page is displayed. This page offers many useful tools for learning how to work with Autodesk Inventor software, including what's new in the latest release, tutorials, and so on. This page also provides a link to the Autodesk Streamline® hosted service, for instantly sharing digital design data across your entire extended manufacturing team. You can evaluate these links at a later time.

Starting with a Project

Autodesk Inventor uses project files to organize and manage the multiple files associated with a design. For this go–cart design, a project file has been provided for you.

To activate the project:

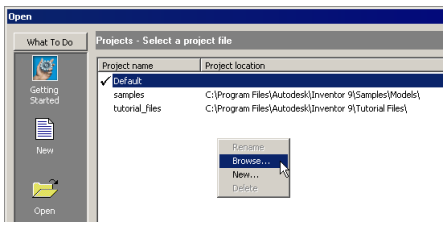

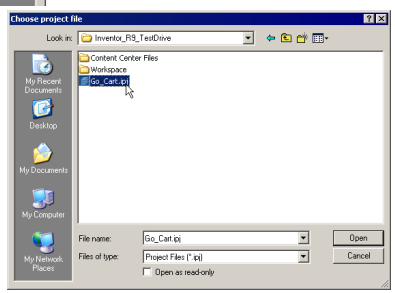

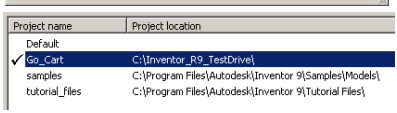

1. In the What to Do area of the Getting Started dialog box (left column), click **Projects.**

2. In the project window, **right-click** and choose **Browse.**

3. Browse to the folder where you downloaded the sample files (default was *C:\Inventor_R9_TestDrive*), select the file ***Go_Cart.ipj*** and then click **Open.**

4. If a check mark does not appear next to the Go_Cart entry, then in the project window, **double-click** on **Go_Cart** to activate the project.

Opening Your First Assembly

First, you open an existing assembly of the go–cart and then proceed to create or add components to that assembly as the design progresses.

To open the existing go–cart assembly:

1. In the What to Do area of the Getting Started dialog box, click **Open.**

2. In the Open dialog box, select ***_Start_Go_Cart.iam***, and then click **Open**.

3. In the upper–right corner of the *_Start_Go_Cart.iam* window, click **Maximize** .

The User Interface

You now see the Autodesk Inventor user interface. The user interface may be familiar because it looks like a standard Windows interface. At the top of the screen is the usual Windows menu bar, which includes a series of menus. For example, on the File menu you find tools like Open, Save, Print, and Exit. On the View menu, you find tools for model and view orientation like Rotate, Pan, and Zoom.

Below the menu bar is the Autodesk Inventor Standard toolbar. You can use the tools on this toolbar to perform common tasks, including

- Performing file tasks (New, Open, Save)
- Starting and finishing standard design tools (Sketch, Return, Update)
- Dynamically viewing your design (Rotate, Pan, Zoom)
- Controlling the appearance of your designs (Shaded, Hidden Edge, Wireframe)

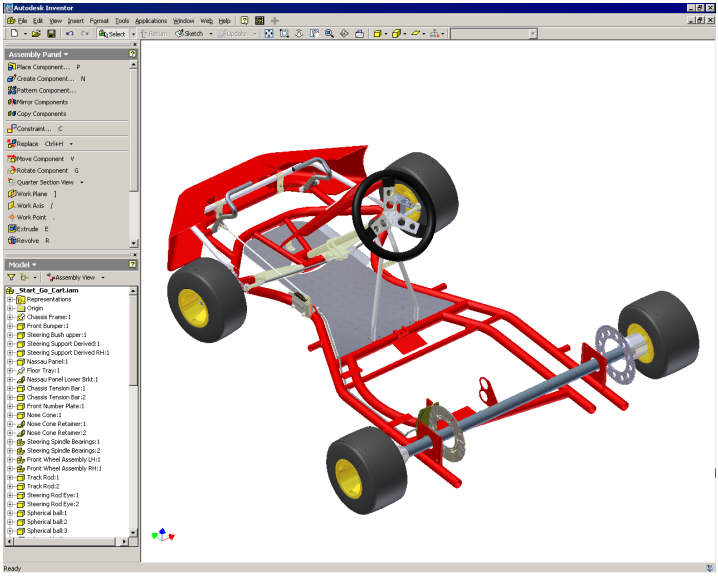

The Autodesk Inventor user interface, with the menu bar and Standard toolbar, is shown on the right. On the left side of the graphics area you see the Panel bar (top) and the Browser (bottom).

The Panel Bar

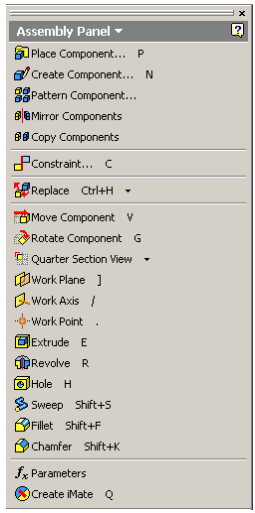

The Panel bar offers specialized design tools that automatically change to reflect the environment you are working in. For example, when you create a new assembly, the Panel bar contains a set of tools for creating and placing components in the assembly. When you start a new component, the Panel bar contains a set of sketching tools to start sketching the component. When you finish sketching, the Panel bar automatically changes to offer the feature tools to convert your sketch to a feature.

The Panel bar offers two modes: Learning and Expert. By default, Learning mode displays the tool icons with descriptions. Once you become familiar with the icons associated with each tool, you can use the Expert mode to display only the icons.

- To change the Panel bar to Expert mode, you can click the title bar or **right-click** the Panel bar background and then choose **Expert**.

The Browser

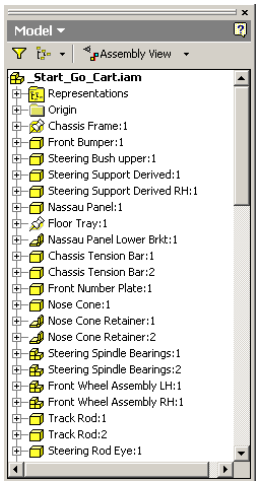

The Browser, by default, is located below the Panel bar. When working in an assembly environment, the Browser displays the structure of the parts and subassemblies in the master assembly. Since you opened an existing assembly, the Browser shows all the components that exist in the go–cart assembly.

When you design a part, the Browser shows the features that you have added to the model. The structure of the part is graphically represented as a "model tree."

Both the Panel bar and Browser can be dragged and resized as in other Windows applications. You can also extend the graphics window to maximum size by double-clicking the blue bar at the top of the graphics window. If you close the Panel bar or the Browser, you can open them again from the **View** menu by choosing **Toolbar>Panel Bar** or **Toolbar>Browser Bar**.

Changing the View Orientation

To change to the default isometric view of the go–cart assembly:

- In the graphics window, **right-click** and choose **Isometric View (F6)**.

  The view orientation rotates to the default isometric view.

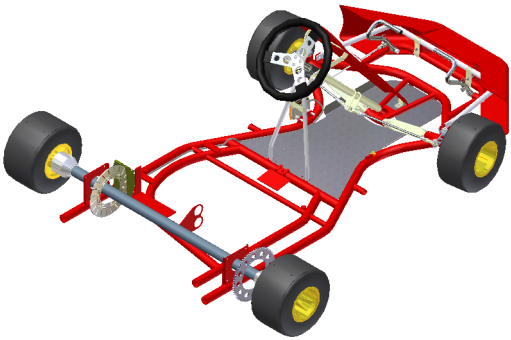

To return to the previous view orientation:

- In the graphics window, **right-click** and choose **Previous View (F5)**.

  Tip: You can also use the shortcut key (F5) to return to the previous view orientation.

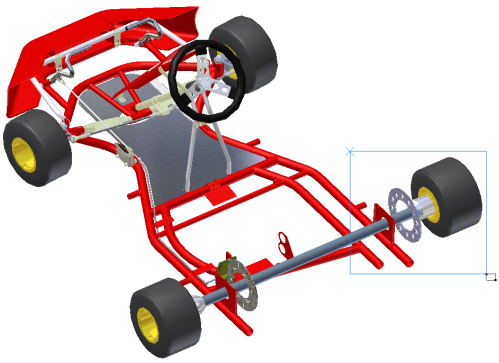

To magnify your view of the sprocket and right wheel:

1. On the Standard toolbar, click the **Zoom Window** tool.

2. In the graphics window, click once near the upper-left of the sprocket, and then click again near the lower-right of the sprocket.

   Your view of the sprocket should be similar to the image shown on the right.

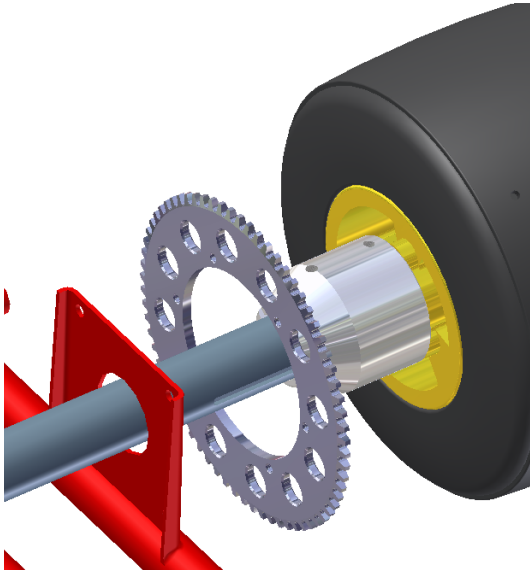

The image to the right shows a sprocket and an axle. To finish the design, we must create a carrier that connects the axle to the sprocket using the six mounting holes on the sprocket.

Creating Your First Part

The first part you are going to design is the carrier for the sprocket. The finished carrier is shown on the right.

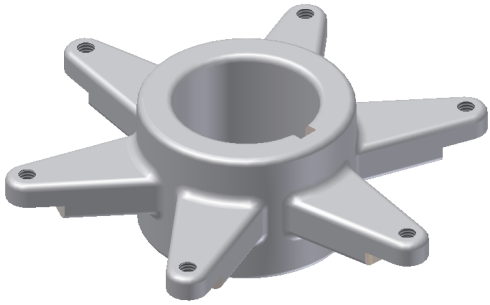

To create a new part using a standard template:

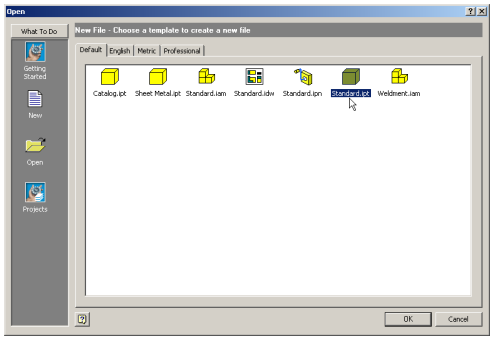

1. On the Standard toolbar, click **New** .

   Another dialog box presents several template options for single parts, sheet metal parts, assemblies, drawings, and so forth.

2. **Double-click** the **Standard.ipt** icon to create a new standard part.

Note: With Autodesk Inventor, you can create parts independently or in the context of an assembly. For the purposes of this project, you design your first part independently.

The Part Modeling Environment

The part modeling environment provides all the tools for creating individual parts.

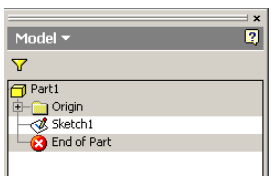

When you start a new part, the Browser shows the default part name, the origin, and the first sketch. Autodesk Inventor software offers a free-form sketching environment enabling you to rapidly create conceptual sketches of your designs. Sketch mode is automatically enabled, so you can immediately start the first sketch of your part. You then use a variety of part modeling tools to convert your 2D layout to 3D designs.

In the sketch window, a grid is visible. The grid makes sketching easier because it gives you a visual reference for the size and position of your sketch objects. The origin of the sketch is at the center of the window. In sketch mode, the Panel bar contains the sketch tools such as Line, Circle, Arc, and so forth.

Sketching the Center Hub

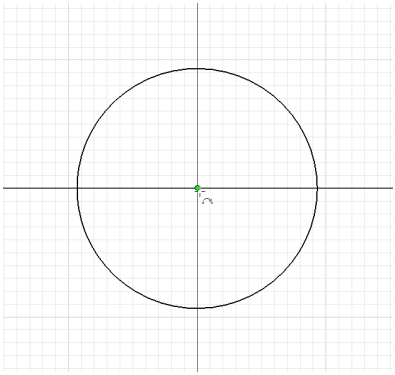

The first feature of this part is cylindrical, so you start by sketching two concentric circles.

1. In the 2D Sketch Panel, click **Center Point Circle** tool.
2. Move the cursor into the sketch area. The cursor now turns to a yellow point.
3. Move the cursor over the intersection of the main axes.

   As you move the cursor close to the intersection of the two axes, notice that the yellow point is snapped and held at the point of intersection. It isn't necessary for the point to be snapped to this location, but it will help you later to easily refer to the base location.
4. Click to define the center point of the first circle, and then move the cursor to the upper right.

   As you move the cursor to the right, a dynamic circle appears and the radial value is displayed in the lower-right corner.
5. Move the cursor to the upper right until the radial value is about 25 and then click.

   This defines the first circle. The Center Point Circle tool is still active enabling you to create another circle.

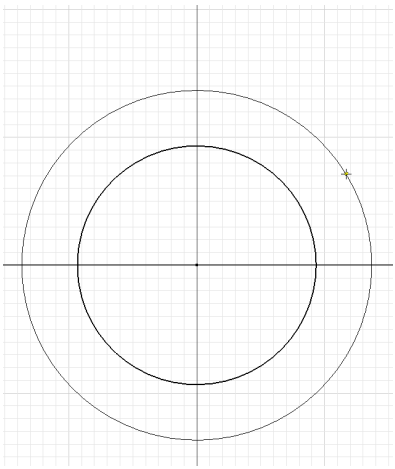

To create a second circle, concentric to the first:

1. Move the cursor back to the center of the existing circle.

   As you move the cursor over the center point of the existing circle, the yellow point turns to a green point and a coincident icon appears.
2. Click to define the center point of the second circle, and then move the cursor to the upper right.
3. Move the cursor to the right until the dynamic circle is slightly larger than the first circle, and then click.
4. To quit the Center Point Circle tool, in the graphics window, **right-click** and then choose **Done**.

You have just created the basic contour of your first sketch.

If you make a mistake or are not satisfied with your results:

- On the Standard toolbar, click the **Undo** tool, and then click the **Center Point Circle** tool to re-create the circles.

Defining the Size of Your Sketch

Autodesk Inventor incorporates dimension-driven design, enabling you to quickly and easily test multiple design concepts before defining the exact form and fit. After you sketch the basic shape, you can apply dimensions to define the geometry's final shape and size.

Adding Dimensions

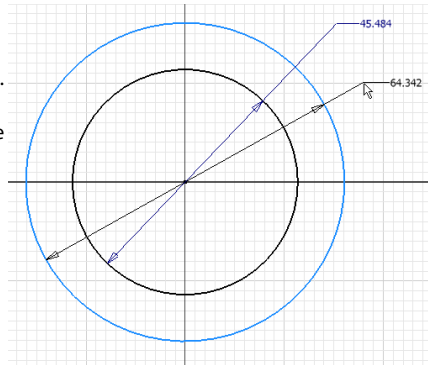

To determine the size of your sketch, you add some dimensions. Autodesk Inventor can generate many different dimension types—linear, angular, radial, diameter, and so forth—using one simple dimensioning tool.

To add dimensions to your sketch:

1. On the Panel bar, scroll down and click the **General Dimension** tool.
2. Move the cursor over the edge of the inner circle.
   A diameter dimension icon is displayed next to the cursor.
3. To add a diameter dimension, select the inner circle, move the cursor to the upper right, and then click to place the dimension (the value of your dimension will be different).

   The General Dimension tool is still active, which enables you to continue adding dimensions.
4. Select the edge of the outer circle, move the cursor to the lower right of the first dimension, and then click to place the second dimension.

Defining the Dimension Values

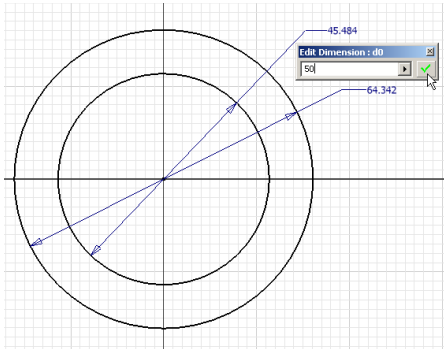

The value of a dimension depends on the exact location of your mouse-clicks during sketching. Next, you modify the dimension values to represent precise values.

To define a specific value for the inner diameter dimension:

1. Select the diameter dimension on the inner circle.

   A dialog box is displayed highlighting the current value of the dimension.
2. Type a value of **50** and click the **green check mark** on the right of the dialog box (or press **Enter**) to accept that value.

   Since the Autodesk Inventor software application is dimension-driven, the geometry automatically adjusts to the new value.

Defining Dimension Values Using Formulas

To automate the design, we want to ensure a constant thickness between the two circles. With Autodesk Inventor, you can use existing dimensions as parametric references. With parametric references, you can change the original value, and all references automatically update. You can even combine parametric references with mathematical formulas.

To specify the value for the outer diameter dimension:

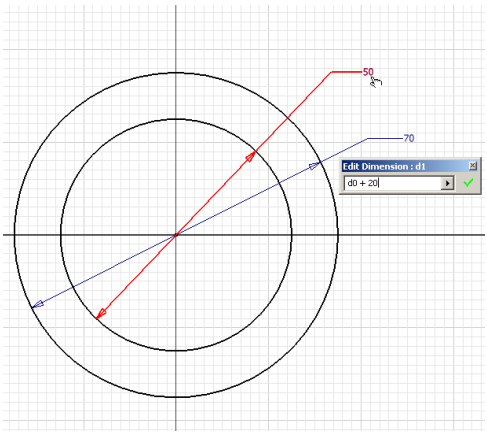

1. With the General Dimension tool still active, select the diameter dimension on the outer circle.
2. With the value of the dimension highlighted in the dialog box, select the diameter dimension for the inner circle.

   The parameter d0 is displayed in the Edit Dimension dialog box.
3. Type **+20** after the d0 entry so that the value reads **d0+20**.
4. To accept this value and close the Edit Dimension dialog box, click the **green check mark** ✓.

To test the formula for the outer dimension:

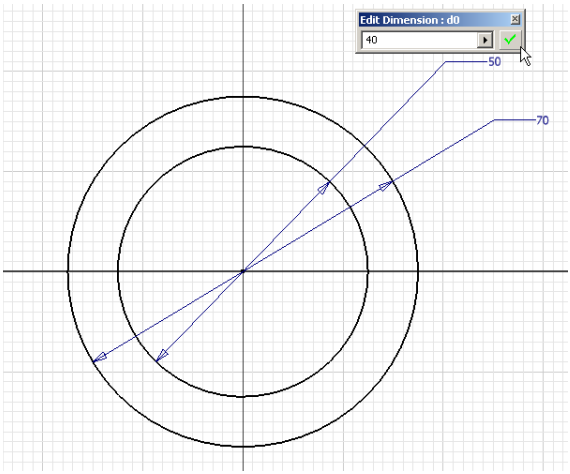

1. Select the 50 dimension.
2. In the dialog box, type a value of **40** and click the **green check mark** ✓ to accept that value.

   Both circles update to reflect the new values.
3. To quit the General Dimension tool, press the **Esc** key or **right-click** in the graphics window and then choose **Done**.

Note: When you enter a dimension using the keyboard, you need not enter “40 mm”; entering “40” is sufficient because you have already defined mm as your default unit of measurement. Autodesk Inventor recognizes both metric and English units of measurement. You can even use both units in the same drawing.

Entering the Third Dimension

Now you are going to turn your 2D sketch into a 3D model. Thus far, you have been viewing the sketch perpendicular, or normal, to the sketch plane. To better visualize the model, you can change your view orientation to an isometric view, which gives a better representation for 3D models.

Changing the View Orientation

To change to an isometric view:

- In the graphics window, **right-click** and choose **Isometric View**.

  Notice that the dimension values are always legible regardless of the view orientation of the sketch.

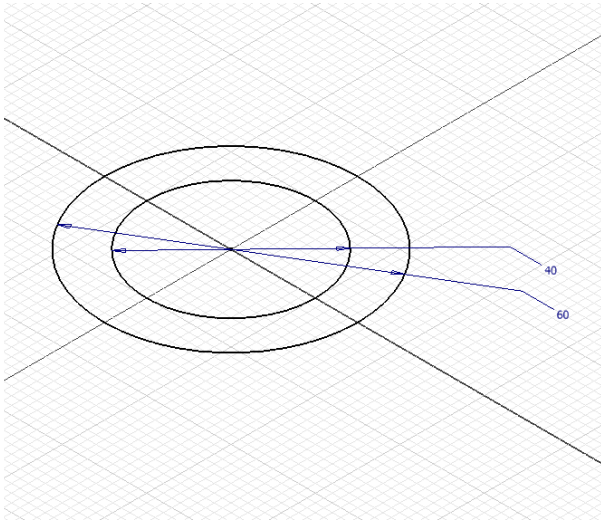

Here are some additional tips if you cannot see all the dimensions:

- Use the **Zoom** tool or press and hold **F3**, and then hold the left mouse button down while dragging the cursor to zoom in or out.
- You can also use the wheel on your mouse to zoom in or out. Turn the wheel forward (away from you) to zoom out, or backward (toward you) to zoom in.
- Use the **Pan** tool or press and hold **F2**, and then hold the left mouse button down while dragging the cursor to pan the view.
- You can also press and hold the wheel button on your mouse while dragging the cursor to pan the view.

Finishing the Sketch

To leave the sketch environment:

- In the graphics window, **right-click** and then choose **Finish Sketch**.

  Notice that the grid is no longer displayed because it is needed only during sketching. Also notice on the Panel bar that the sketch commands have been replaced by the 3D part modeling feature tools.

Creating Your First Feature

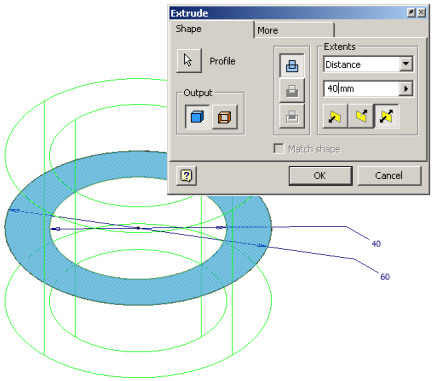

For this portion of the design, you use the Extrude tool.

1. In the Panel bar, click the **Extrude** tool.

   The Extrude dialog box is displayed.

2. To identify the portion of the sketch you want to extrude, select the area between the two circles.

3. In the Extrude dialog box, click the **Centered** option.

   A preview of the 3D model is shown.

4. Move the cursor to an edge of the preview, and then drag the extrusion to a slightly larger height.

   Notice that the value in the Extrude dialog box is automatically updated. You can also specify an exact distance in this dialog box.

5. In the Extrude dialog box, highlight the current distance value, type a distance of **40,** and then click **OK** to close the dialog box and create the extrusion feature.

Congratulations! You have just created your first 3D model with Autodesk Inventor software.

Creating Another Sketch

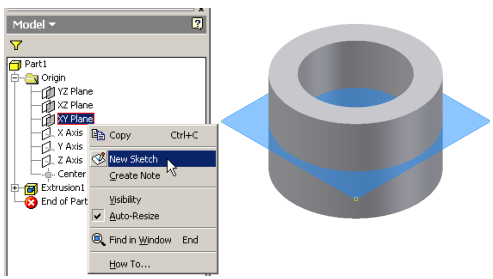

Next, you add a flange to your part design. You start by defining another sketch.

To create another sketch, you must first define the orientation of the sketch plane. For the flange, you use the same plane that you used to define the previous extrusion feature.

1. In the Browser, click the **plus (+) sign** in front of Origin.

   The names of the principal planes and axes are displayed.

2. In the Browser, click once on each of the plane names.

   Notice that the orientation of each plane is displayed in the graphics window.

3. In the Browser, **right-click** the name **XY Plane** and choose **New Sketch**.

   The grid is displayed, and the sketch tools appear on the Panel bar.

Notice that several elements in the Browser have a gray background. The Browser uses shading to identify active and inactive elements. In this case, Sketch2 is active.

Viewing Normal to the Sketch Plane

Before you start to sketch the geometry for the flange, you should change the orientation of your view to be perpendicular to the sketch plane.

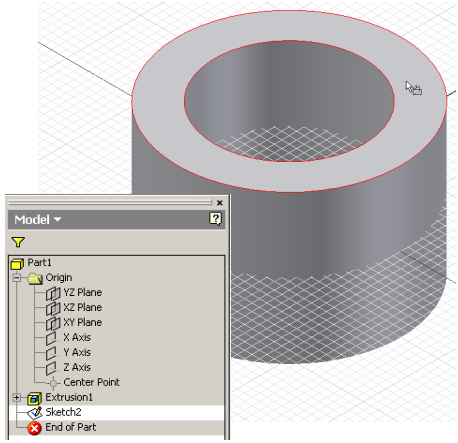

1. On the Standard toolbar, click the **Look At** tool.
2. In the graphics window, select the top face of the part.

   Tip: You can also select the Sketch2 entry in the Browser to view normal to that sketch plane.

Changing the Default Sketch Behavior

At any time, you can change the default sketching behavior in Autodesk Inventor. Next, you change the display settings of the grid and specify that you want to edit the value of a dimension when it is created.

To change the default 2D sketching behavior:

1. From the Tools menu, choose **Application Options**.
2. Click the **Sketch** tab.
3. Clear the **Minor Grid Lines** and **Axes** check boxes.
4. Select the **Edit dimension when created** check box.
5. Click **OK** to close the Options dialog box.

Notice that the grid display has changed and the axes are no longer visible on the sketch plane.

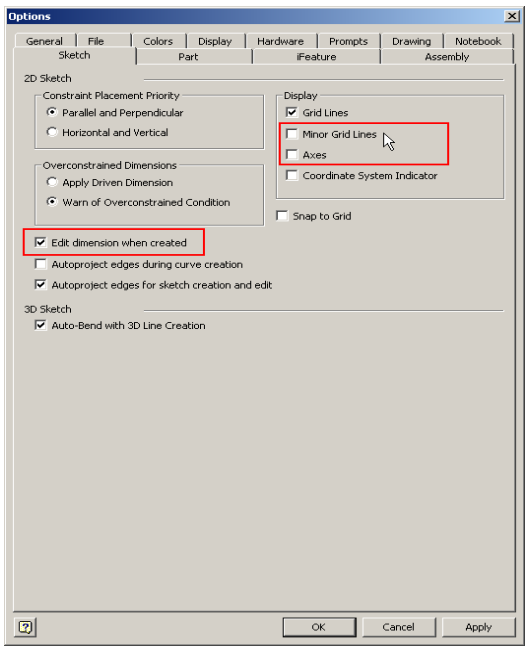

Referencing Existing Geometry

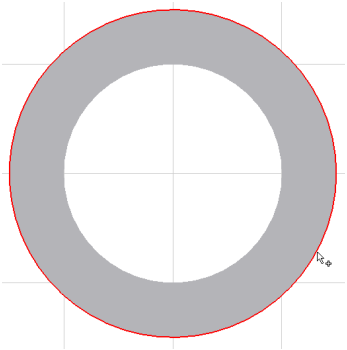

The flange must maintain a geometric relationship with the existing solid. You can easily use existing geometry by referencing existing dimensions or by projecting geometry onto the current sketch plane.

To project the outer circular edge of the solid:

1. On the Panel bar, scroll down and click the **Project Geometry** tool.
2. In the graphics window, select the outer edge of your 3D part.

   A light green circle and centerpoint are created on the sketch plane. This geometry is fully associative to the outer edge of the part. That means this geometry automatically updates when the part edge changes.
3. To quit the Project Geometry tool, **right-click** in the graphics window and chose **Done**.

Sketching the Flange

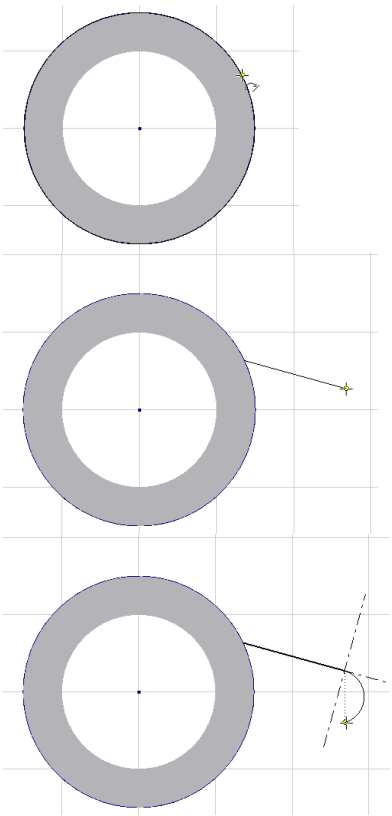

Next, you sketch a line that defines the shape of the flange.

1. On the Panel bar, click the **Line** tool.
2. In the graphics window, move the cursor to the upper right of the projected edge, as shown in the image to the right.
   A coincident symbol appears next to the cursor.
3. Click to define the start point of the line.
4. Move the cursor to the right and slightly down, as shown in the image on the right, and then click to define the second point of the line.

While using the Line tool, you can create also create arcs.
To create an arc that is tangent to the previous line segment:

1. Drag the endpoint of the line to the right along the direction of the line.

   A preview of the arc is displayed. A dotted line appears when the endpoint of the arc is vertically aligned with the start point of the arc.
2. Move the cursor directly below the start point of the arc, as shown on the right, and then release the mouse button to create the arc.

To continue sketching the final line segment:

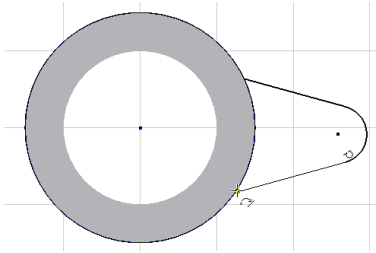

1. Move the cursor over the lower right of the projected edge until a coincident symbol appears next to the cursor and a tangent symbol appears next to the endpoint of the arc.
2. When both symbols are displayed, click to define the endpoint of the final line segment.

   Note: An additional dotted line may appear while sketching this final line segment. Dotted reference lines appear when the cursor is aligned with other geometry in the sketch. In this case, the cursor may be vertically aligned with the start point of the first line segment.

3. To quit the Line tool, in the graphics window, **right-click** and choose **Done**.

Constraining a Sketch

Constraints apply predictable behavior to a specific object or create predictable relationships between two objects. For example, a horizontal constraint can be applied to a line to ensure that line remains horizontal. This horizontal constraint can be applied automatically as you sketch the line, or manually to an existing line.

Next, you create some construction geometry and constrain the sketch of the flange.

Creating Construction Geometry

Construction geometry often simplifies the process of constraining a sketch. With Autodesk Inventor, you can define any sketched geometry as construction geometry.

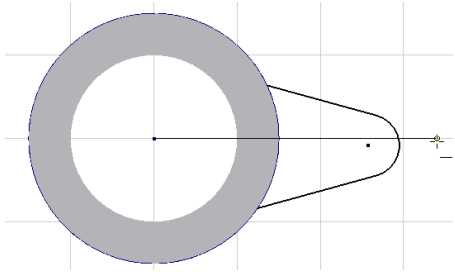

To create a horizontal construction line:

1. On the Panel bar, click the **Line** tool again.
2. On the right side of the Standard toolbar, click the **Construction** tool to turn construction mode on.
3. In the graphics window, select the center point of the hub to define the start point of the line.
4. Move the cursor to the right of arc on the flange. A horizontal symbol — appears next to the cursor when the preview of the line is nearly horizontal.
5. With the horizontal symbol displayed, click to define the endpoint of the construction line.

   A horizontal dashed line is created. Notice the difference in linetype and color of the construction line.

6. On the Standard toolbar, click the **Construction** tool to turn construction mode off.
7. To quit the Line tool, in the graphics window, **right-click** and choose **Done**.

Constraining the Flange

The center points of the hub and the arc on the flange must be aligned horizontally. You can control this behavior by making the center point of the arc coincident with the horizontal construction line.

To align the arc on the flange with the construction line:

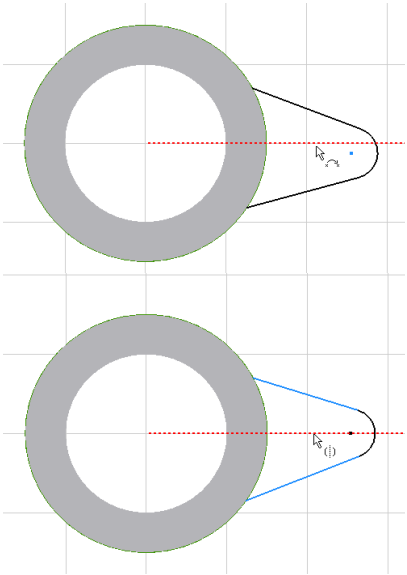

1. On the Panel bar, click the **down arrow** next to the Perpendicular tool.

   The tools in this list are all the constraint tools.

2. Click the **Coincident** tool.

3. Select the center point of the arc, and then select the construction line.

   The center point of the arc adjusts to be coincident with the construction line.

The two angled lines adjacent to the arc need to be symmetrical about the construction line. To make the two lines symmetrical:

1. On the Panel bar, click the **down arrow** next to the Coincident tool.

2. Click the **Symmetric** tool.

3. Click the top angled line, the bottom angled line, and then select the construction line.

   Tip: To help guide you through the process of using a tool, tool descriptions and prompts are conveniently displayed in the lower-left corner of the Autodesk Inventor application window, just below the Browser.

   The two angled lines are now symmetrical about the construction line.

Displaying Existing Constraints

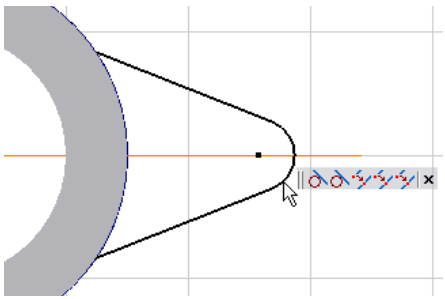

At any time while you are sketching, you can display the constraints on your sketch.

To display the constraints:

1. On the Panel bar, click the **Show Constraints** tool.

2. Select the arc.

   The constraint icons appear, showing all the constraints associated with the arc.

To highlight the geometry associated with each constraint:

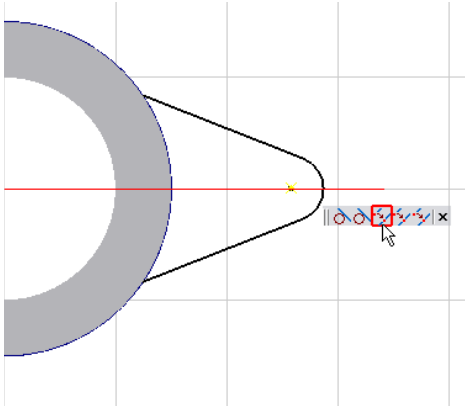

1. Move the cursor over the constraint icons.

   Both sketch objects associated with that constraint are highlighted in the sketch.

2. Click the X to the right of the constraint icons to close the constraints display.

3. To quit the Show Constraints tool, press **Esc** (or **right-click** and choose **Done**).

   Tip: To delete an existing constraint, select the appropriate constraint icon and press the **Delete** key on your keyboard.

Finishing the Sketch with Dimensions

Next, you finish constraining the size of the sketch by creating some dimensions.

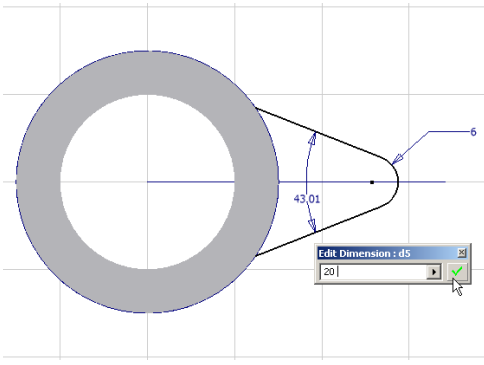

1. On the Panel bar, click the **General Dimension** tool.

2. Select the arc and place the dimension to the upper right of the arc.

   Since you changed the default behavior for dimensioning, the Edit Dimension dialog box is displayed enabling you to define the value.

3. In the dialog box, type **6** and then click the **green check mark** to accept that value.

To create an angular dimension between the two angled lines:

1. Select the top angled line, select the bottom angled line, and then place the dimension between the two lines.

2. In the dialog box, type **20** and press **Enter** to accept that value.

   The lines update to reflect the new angular value.

With Autodesk Inventor, there is no need to fully constrain the model as is the case in some other CAD systems. Since we are early in the design phase of our carrier, we want the length of this flange to fluctuate but we also want to show the current length. To show the length of the flange rather than define the length, you can create a driven dimension.

To do so, with the General Dimension tool still active:

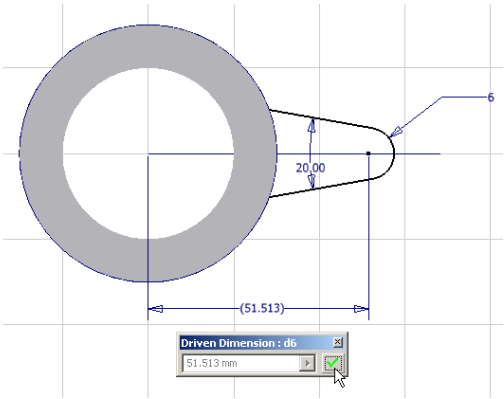

1. On the right side of the Standard toolbar, click the **Driven Dimension** tool to toggle the default dimension style to driven.

2. Select the center point of the arc, select the center point of the hub, and then place the dimension near the bottom of the sketch.

3. In the dialog box, click the **green check mark** (or press **Enter**) to accept that value.

   Since the dimension style is driven, notice you cannot change the value in the dialog box.

4. To toggle the default dimension style back to Normal, click the **Driven Dimension** tool again.

5. To quit the General Dimension tool, press **Esc**.

Checking the Sketch Visually

You can visually check how complete your sketch is by interrogating the sketch geometry.

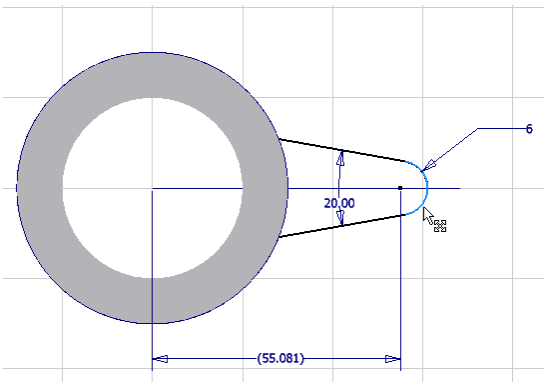

To visually check your sketch:

1. Select and drag the arc to the right.

   A preview of the modified geometry is displayed.

2. Release the mouse button to finish moving the sketch geometry.

   Notice the sketch only moves horizontally and the driven dimension updates to reflect the new value.

3. Move the arc back to the left so that the value of the driven dimension is about 55.

Finishing the Flange

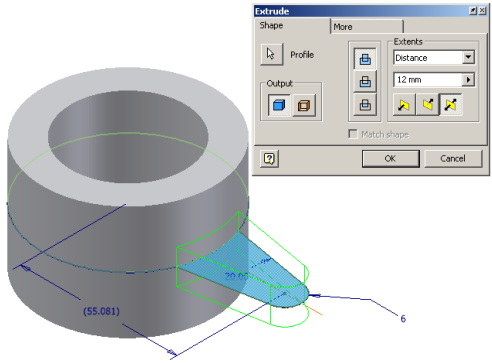

The sketch for the flange is now complete. Next, you use the Extrude tool again to create another feature.

1. To display an isometric view, press **F6**.
2. In the graphics window, **right-click** and choose **Finish Sketch**.
3. In the Panel bar, click the **Extrude** tool.
4. In the graphics window, click inside the sketch geometry defining the flange.
5. In the Extrude dialog box, click the **Centered** option.
6. Highlight the distance value and type **12**, and then click **OK** to create the second extrusion feature.

Zooming and Rotating



Now it's time to visually examine your model. In Autodesk Inventor you can easily do this at any time—even while you are using another tool.

1. On the Standard toolbar, click the **Zoom All** tool.

   The Zoom All tool adjusts the view of the model so that you can see the entire model onscreen.

2. On the Standard toolbar, click the **Rotate** tool.

   The Rotate tool displays an Orbit symbol as a circle.

3. To dynamically rotate the model and view it from different directions, move the cursor inside the Orbit circle, and then click and hold the left mouse button while moving the cursor.
4. To rotate the model about its vertical or horizontal axis, move the cursor over the quadrant lines on the perimeter of the Orbit circle, and then drag.
5. To spin the model about an axis perpendicular to your screen, move the cursor just outside the Orbit circle, and then drag.
6. To redefine the center of rotation, simply click at the point about which you want to rotate.
7. To quit the Rotate tool, press **Esc** or right-click and then choose **Done**.
8. To return to the isometric view, press **F6** or **right-click** and choose **Isometric View**.

Using More 3D Part Modeling Tools

Autodesk Inventor software includes a wide range of 3D part modeling tools enabling you to automate the creation of simple or complex shapes. Next, you create some circular patterns, fillets, and holes.

Creating a Pattern

Rather than sketching and extruding each flange, you can use the circular pattern tool to create a pattern of the existing flange.

To create a circular pattern:

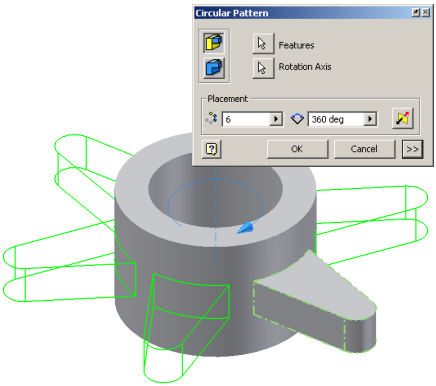

1. On the Panel bar, click the **Circular Pattern** tool.

   The Circular Pattern dialog box is displayed and the Features button is already selected, enabling you to identify the features to pattern.

2. In the graphics window, select the flange extrusion.

3. In the Circular Pattern dialog box, click the **Rotation Axis** button.

4. In the graphics window, select the inner face of the hub.

   A preview of the circular pattern is displayed.

5. In the Circular Pattern dialog box, click **OK** to create the circular pattern feature.

A circular pattern of the flange with six equally spaced occurrences is created.

Filleting the Edges

Next, you fillet the sharp edges of the part. Even though the fillets required on this part are quite simple, Autodesk Inventor can create complex fillets.

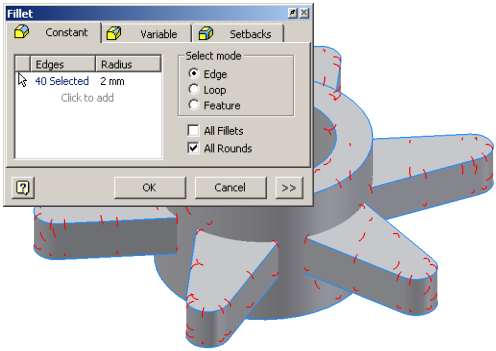

To create fillets on the model:

1. On the Panel bar, click the **Fillet** tool.

   Rather than selecting individual edges, you can select multiple edges of a specific type.

2. In the Fillet dialog box, check the **All Rounds** check box and then click **OK** to create the fillet feature.

   A fillet feature with a default 2 mm radius is created on all the sharp edges of your part.

3. Click the **Fillet** tool again.

4. In the Fillet dialog box, check the **All Fillets** check box.

5. Highlight the 2 mm radial value and type **3**.

6. Click **OK** to create the second fillet feature.

   Another fillet feature is created with a 3 mm radius on all the fillet edges of your part.

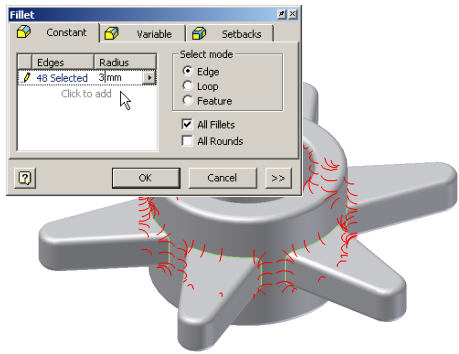

Creating Tapped Holes

Next, you create a tapped hole on the end of the original extruded flange.

To create a tapped hole:

1. On the Panel bar, click the **Hole** tool.

   Note: A What's New in Autodesk Inventor dialog may appear notifying existing users of enhancements to specific tools. You can close this dialog.

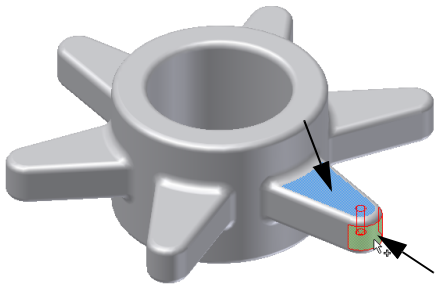

In the Holes dialog box:

2. In the Placement drop down list, select **Concentric**.

3. To define the placement location on the part, select the top face of the flange and then select the cylindrical face on the end of the flange as shown in the image to the right.

   Note: Ensure you select the flange you extruded rather than one of the circular pattern occurrences.

4. Select the Termination drop down list and choose **Through All**.

5. Select the **Tapped** option.

6. Select the Thread Type drop down list and choose **ISO Metric profile**.

7. Select the Size drop down list and choose **6**.

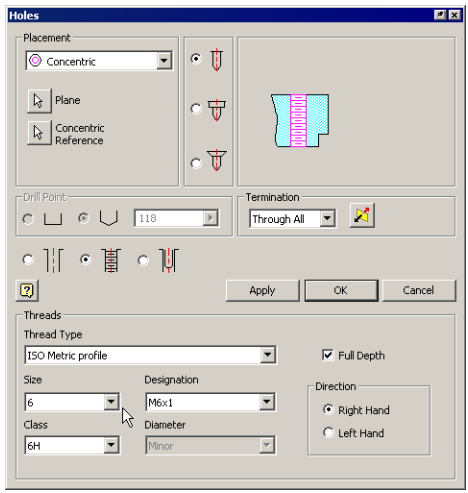

8. In the Holes dialog box, click **OK** to create the tapped hole.

Note: Threads will not be displayed on the hole if you cleared the **Show Reflections and Textures** check box in the Options dialog box at the beginning of this test drive.

Creating an Associative Pattern of the Hole

Next, you create a circular pattern of the hole that is adaptively linked to the circular pattern of the flange extrusion. This ensures that the number of holes always matches the number of flanges.

To create a circular pattern of the hole:

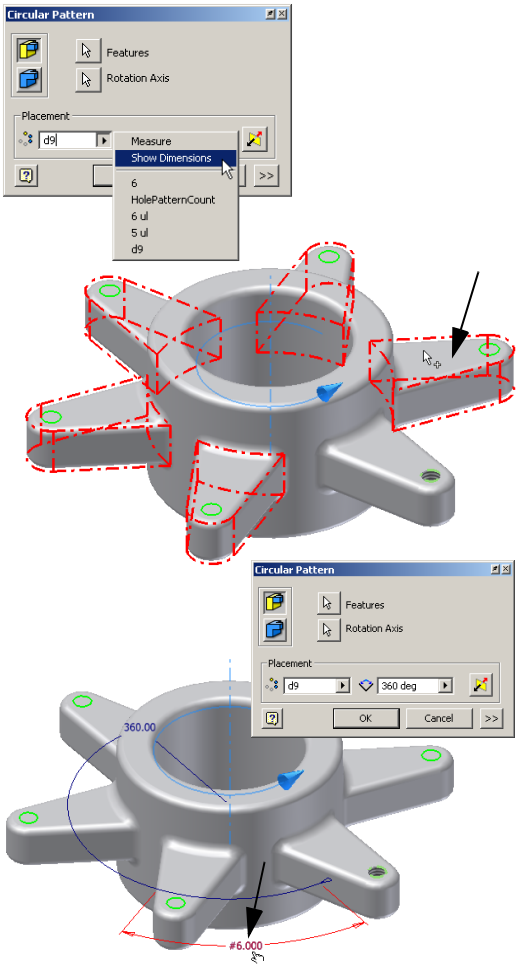

1. On the Panel bar, click the **Circular Pattern** tool.
2. In the graphics window, select the hole feature.
3. In the Circular Pattern dialog box, click the **Rotation Axis** button.
4. Select the inner face of the hub.
5. In the Circular Pattern dialog box, click the **right arrow** next to the value defining the number of occurrences (currently defined as 6) and choose **Show Dimensions**.

   The Show Dimensions option enables you to display dimensions on other features of the part. You can visually check the value of a dimension, or you can make a parametric reference to a dimension.
6. In the graphics window, select one occurrence of the existing circular pattern of the flange.
7. When the dimensions for that circular pattern are displayed, select the **#6.000** dimension.

   The parameter name defining the number of occurrences for the circular pattern of the flange extrusion is now used to define the number of occurrences for the circular pattern of the hole.
8. In the Circular Pattern dialog box, click **OK**.

By now, you will have noticed that the highly visual and gesture-based, interactive user interface in Autodesk Inventor makes 3D design easy. Autodesk Inventor offers a design environment with fewer, smarter commands that reflects the way you work, making it the industry's shortest path to full 3D productivity.

Saving the Model

Now would be a good time to save your model.

1. On the Standard toolbar, click the **Save** tool.

2. In the Save As dialog box, type **_My_Carrier** as the file name, and then click **Save** to save all your changes.

Completing the Part Design

Next, we need to remove some material from the end of the flange to reduce the weight and to better align the center of gravity of our carrier and the sprocket. To remove the material, you can revolve a rectangular sketch about the center of the hub. But first, you need to create a plane to orient that sketch.

Creating Work Axes

The plane you need to create must be oriented about the center axes of the hub and the hole on the original flange extrusion. To orient the plane with these two shapes, you can create work axes.

To create a work axis on the hub:

1. On the Panel bar, click the **Work Axis** tool.

2. In the graphics window, select the inner face of the hub.

   The first work axis is created.

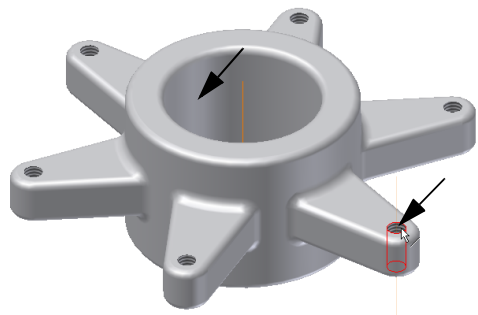

To create another work axis on the hole in the flange:

1. Click the **Work Axis** tool again.

2. Select the hole on the original flange extrusion.

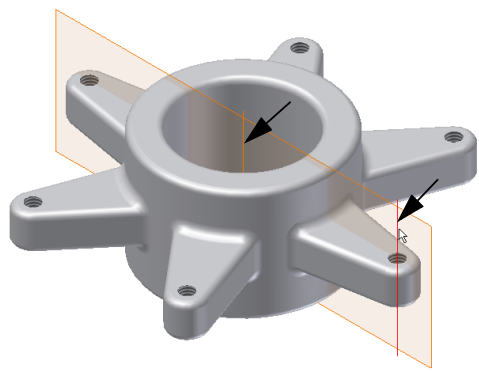

Creating a Work Plane

Next, you create a work plane on the two work axes.

To create a work plane:

1. On the Panel bar, click the **Work Plane** tool.

2. In the graphics window, select the two work axes.

   A work plane is created that bisects the part on the two work axes.

Creating Another Sketch

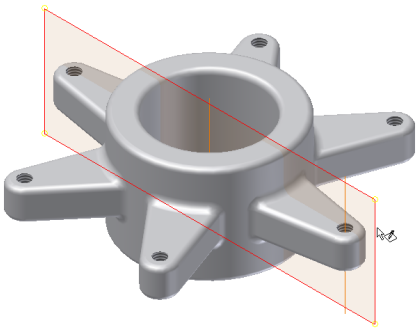

To create a new sketch on the new work plane:

1. On the Standard toolbar, click the **2D Sketch** tool.
2. In the graphics window, select the work plane you just created.

Viewing the Sketch Plane

You can see that the grid on the sketch plane interferes with the model. To see the entire sketch plane or to work inside solid models, you can use the Slice Graphics tool.

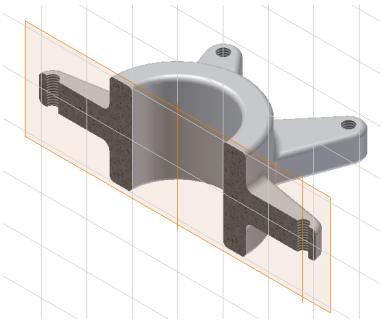

- In the graphics window, **right-click** and choose **Slice Graphics**.

  Now you can see the entire sketch plane. The cut surface of the model is also shown with a texture (unless you cleared the Show Reflections and Textures option earlier). This section view slices the model through the current sketch plane for viewing purposes only. The actual part geometry is not modified.

Creating a Rectangular Sketch

Next, you create a rectangular sketch.

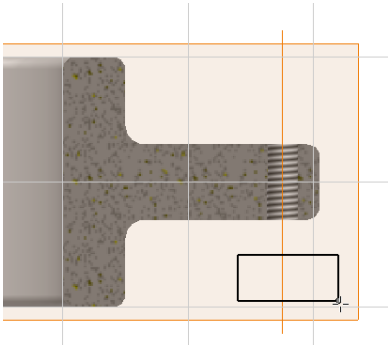

To orient your view normal to the sketch plane:

1. On the Standard toolbar, click the **Look At** tool and then select the work plane.
2. Use the **Zoom Window** tool (or use the wheel on your mouse) to zoom in on the right side of the part.

   Tip: When you use the wheel on your mouse for zooming, the current cursor location is used as the zoom area target.

To create a rectangle:

1. On the Panel bar, click the **Two Point Rectangle** tool.
2. At the approximate location shown in the image on the right, click once to define the upper left of the rectangle, and click again to define the lower right of the rectangle.
3. To quit the Two Point Rectangle tool, press **Esc**.

To dimension the rectangle:

1. On the Panel bar, click the **General Dimension** tool.
2. Select the right vertical edge of the rectangle and place the dimension to the right.
3. In the Edit Dimension dialog box, type **5** and press **Enter**.
4. Select the lower horizontal edge of the rectangle and place the dimension below the rectangle.
5. In the Edit Dimension dialog box, type **14** and press **Enter**.
6. To quit the General Dimension tool, press **Esc**.

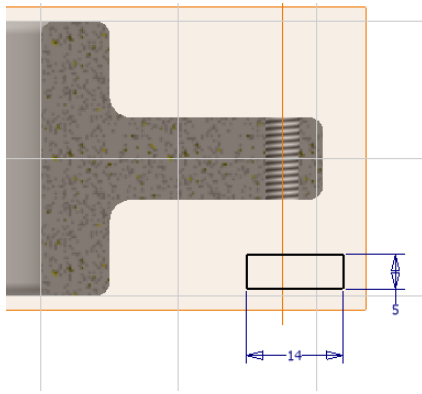

Aligning the Sketch with the Part Edges

To align the rectangular sketch with the edges of the flange, you can project the edges of the part to the sketch plane and then use colinear constraints.

To project the edge of the flange:

1. On the Panel bar, click the **Project Geometry** tool.
2. Select the lower edge of the flange and then select the right (silhouette) edge of the flange.

   Two green lines, representing the edges of the flange are displayed.
3. Press **Esc** to quit the Project Geometry tool.

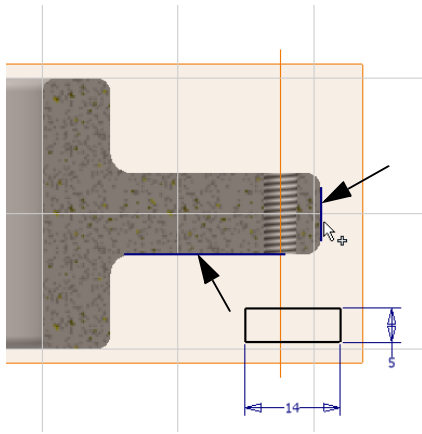

To align the rectangle with the projected edges:

1. On the Panel bar, click the **down arrow** next to the Symmetric tool and then click the **Colinear** tool.
2. Select the right edge of the rectangle, and then select the projected right edge of the flange.

   The rectangular sketch aligns vertically with the projected edge.

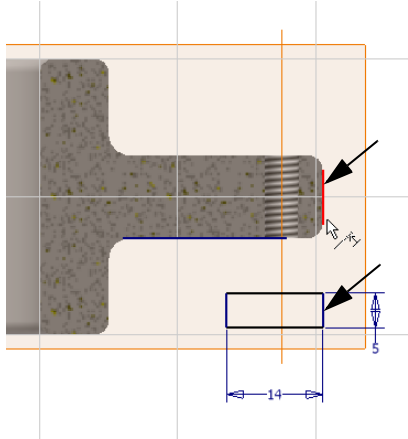

To finish constraining the rectangle from an isometric view:

1. In the graphics window, **right-click** and choose **Isometric View** (or press **F6**).

2. With the Colinear tool still active, select the lower edge of the rectangle, and then select the projected lower edge of the flange.

   The rectangular sketch is now fully constrained to the proper location on the flange.

3. Press **Esc** to quit the Colinear tool.

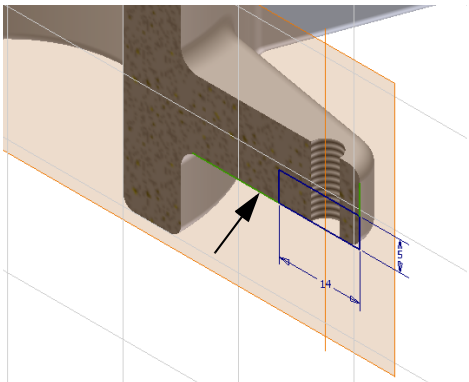

Revolving the Rectangular Sketch

Now that you have finished the sketch, you can use the Revolve tool to create the feature.

1. To start the Revolve tool using a keyboard shortcut, press the **R** key on your keyboard.

   Since there is only one closed profile in the sketch, the rectangle is automatically selected for you.

2. To define the center axis for the revolution, select the work axis at the center of the hub.

3. In the Revolve dialog box, click the **Cut** option and then click **OK** to create the Revolve feature.

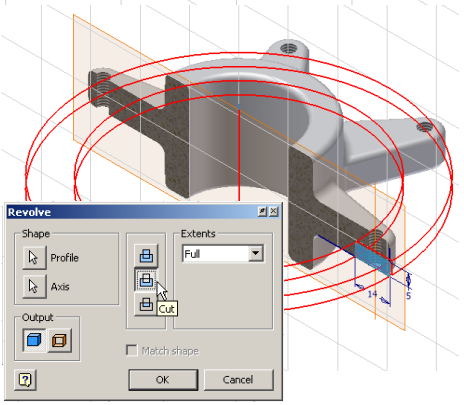

Reviewing the Browser

By now, you have probably noticed that several new items appear in the Browser. The model tree in the Browser shows each step in the modeling process. You can use the Browser to highlight or edit existing elements, and even add new elements. As you become familiar with Autodesk Inventor, you will realize just how useful the Browser is for many design and analysis tasks.

To see how the elements in the Browser are related to the geometry on your part:

- Move the cursor over the elements in the Browser. The corresponding part geometry is highlighted in the graphics window.

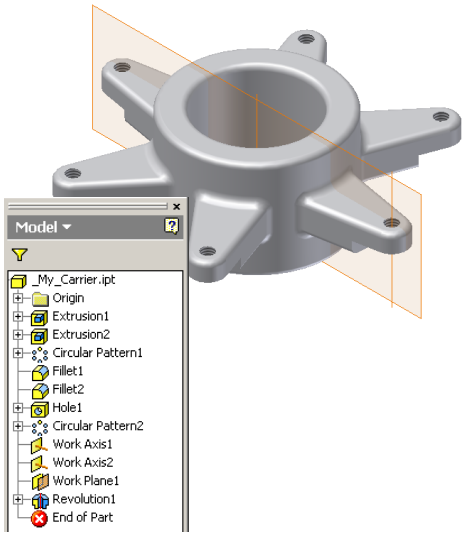

Since you no longer need to use the two work axes and the work plane, you can use the Browser to turn off their visibility.

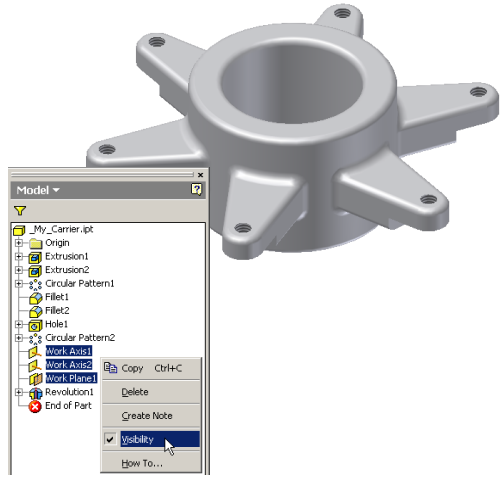

1. In the Browser, click **Work Axis1**.

2. Press and hold the **Ctrl** key, and then select **Work Axis2** and **Work Plane1** (or press and hold the **Shift** key and just select **Work Plane1**).

   All three items in the Browser should be highlighted.

3. **Right-click** one of the highlighted items, and then choose **Visibility**.

   The work axes and work plane are no longer visible in the graphics window and the feature icons in the Browser are grayed.

Using iFeatures—Intelligent Features

Quite often during the design process, you encounter shapes that are common among many parts. These features may be nearly identical, differing only slightly in their size. With Autodesk Inventor software, you can use iFeatures, or intelligent features, to create a library of common features and reuse them in different designs.

The final requirement for your carrier design is a keyway on the hub. An iFeature of a keyway has already been created and placed in your current workspace. Next, you reuse that keyway in the design of your carrier.

To insert an iFeature of the keyway:

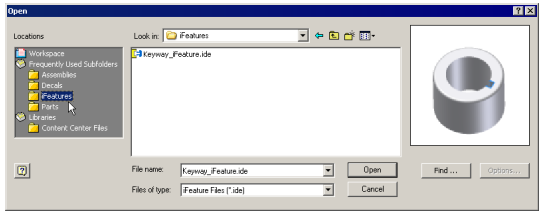

1. On the Panel bar, click the **Insert iFeature** tool.

2. In the Insert iFeature dialog box, click the **Browse** button.

3. In the Open dialog box, under Locations, double-click **Frequently Used Subfolders** to expand the display, and then click the **iFeatures** folder.

4. In the files list, select **Keyway_iFeature.ide**, and then click **Open**.

The Insert iFeature dialog box is displayed, enabling you to define the position and size of the iFeature.

To place the keyway iFeature on your part:

1. In the graphics window, select the top circular edge of the hub as shown in the image on the right.

2. In the Insert iFeature dialog box, click **Profile Plane1**.

3. In the graphics window, select the top face of the hub as shown in the next image on the right.

4. In the Insert iFeature dialog box, click **Next**.

   Note: Notice on the left side of the Insert iFeature dialog box that the green box has moved from Position to Size. The green box identifies the current status of inserting the iFeature.

5. In the Insert iFeature dialog box, the Key Depth value should already be highlighted. If this value is not highlighted, then select **22.000**.

6. For the Key Depth value, type **24** and then click **Finish**.

   The keyway iFeature is created on your carrier model.

   Note: Notice in the Browser how the iFeature icon shows the unique name of the iFeature.

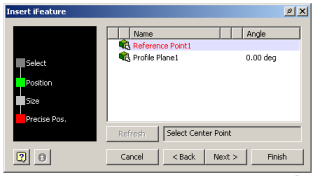

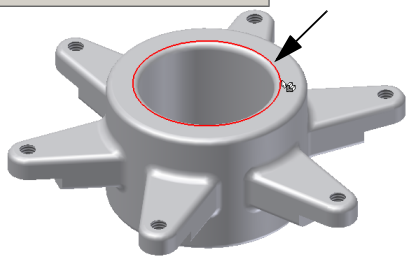

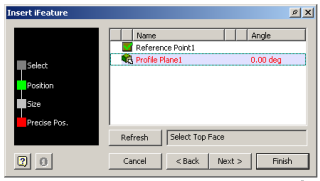

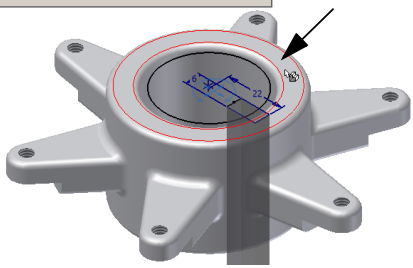

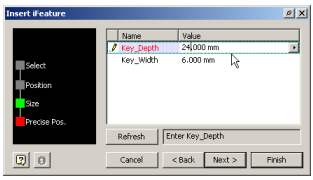

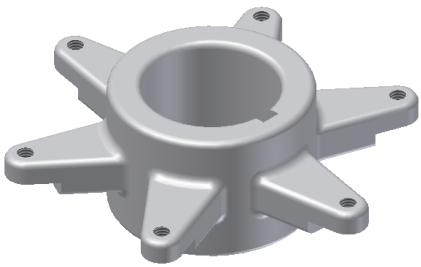

Creating a More Realistic Representation of the Part

Before you finish the design of the carrier, let's change the display to a more realistic 3D representation of the part.

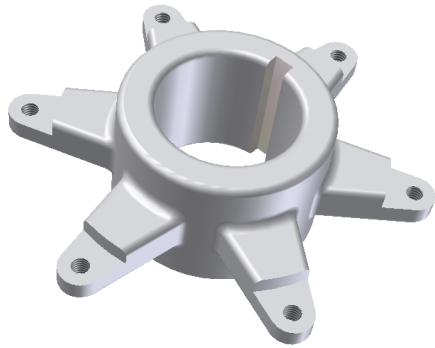

To change the current view to a perspective view:

1. On the Standard toolbar, click the **down arrow** next to the Orthographic Camera tool and then select the **Perspective Camera** tool.

2. Use the **Rotate** tool to rotate the part to the orientation shown in the image to the right.

You can also change the appearance of individual features on the part, independent of the part appearance. For example, you may want the revolved cutout on the flanges to have a machined appearance.

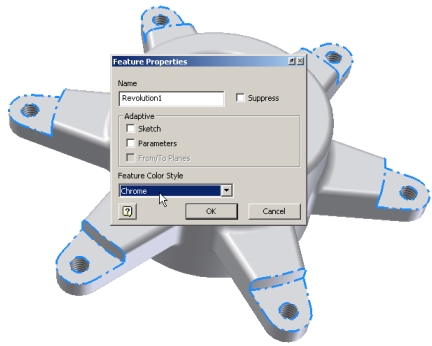

To change the appearance of a feature:

1. In the Browser, **right-click** on **Revolution1** and choose **Properties**.

2. In the Feature Properties dialog box, click the Feature Color Style drop–down list, choose **Chrome**, and then click **OK**.

   Tip: While scrolling in the drop–down list, you can type **C** to skip to the first entry starting with the letter C.

Since the keyway feature is also a machined feature, you can repeat this process to change the appearance to chrome.

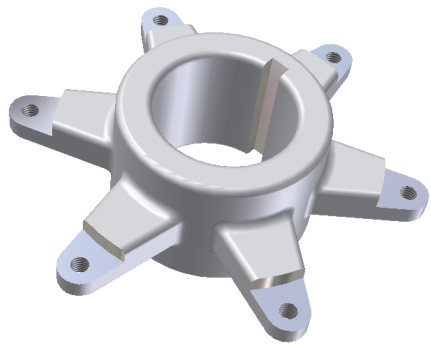

Congratulations! You have just completed your design of the carrier. This is a good time to save your work.

To save your design:

- On the Standard toolbar, click the **Save** tool.

Creating a Production Drawing

Thus far you have created a 3D model, but what about creating technical drawings? With Autodesk Inventor software, you can automatically create front, side, isometric, detail, section, and auxiliary views of your 3D models—with automatic retrieval of model dimensions—dramatically reducing drawing creation time over traditional 2D methods. You can also use a robust set of dimension and annotation tools and 2D symbols to quickly complete your drawing set.

Starting a New Drawing

To create a new drawing of your 3D part:

1. On the Standard toolbar, click the **New** tool.

2. In the Open dialog box, **double-click** the **Standard.idw** icon.

   A new A3 size drawing sheet with a frame and title block is created.

Notice that the Panel bar has automatically changed to offer the appropriate Drawing Views Panel tools.

Generating the First View

To create the first view of your 3D part:

- On the Panel bar, click the **Base View** tool.

  The Drawing View dialog box is displayed, and a preview of the base view is shown at the current cursor location.

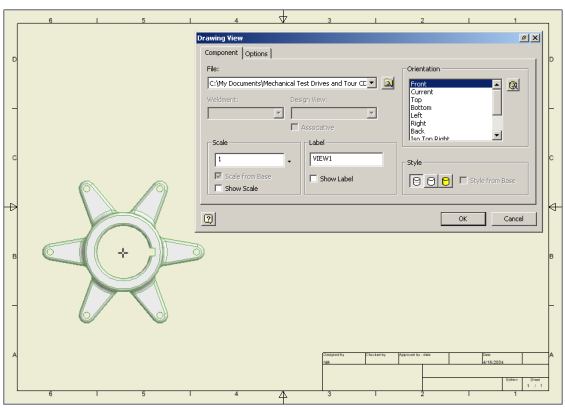

Note: Autodesk Inventor uses the contents of any open parts or assemblies as the default file for the drawing view. Your carrier part should be the default file for the drawing view. If the go–cart assembly is displayed in the preview, then select **_My_Carrier.ipt** from the File drop–down list in the Drawing View dialog box.

To create a drawing view of your carrier part:

1. In the Drawing View dialog box, ensure the scale is set to **1:1** and the style is set to **Hidden Line** .

2. Move the cursor to the lower-left side of the drawing sheet, and click to place the view.

   Tip: If the dialog box is in the way, simply drag it by clicking the blue title bar at the top.

Creating More Views

You can easily create top, side, and isometric views directly from the front view.

To create a side and isometric view of the part:

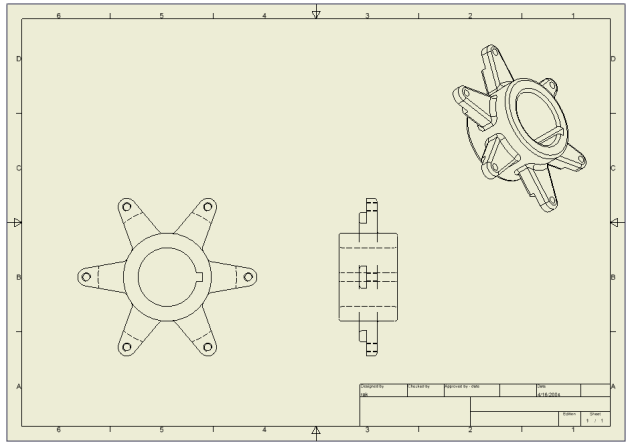

1. On the Panel bar, click the **Projected View** tool.
2. Select the front view you just created, and then click to the right to define the location of the side view.

   A rectangular preview of the view is displayed.
3. Move the cursor to the upper right (as shown in the image), and click again to define the location for an isometric view.
4. To finalize these drawing views, **right-click** and then choose **Create**.

Your drawing should now show three different drawing views similar to the image shown above.

Shading a View

You can also enhance the appearance of your drawing views.

To shade the isometric view:

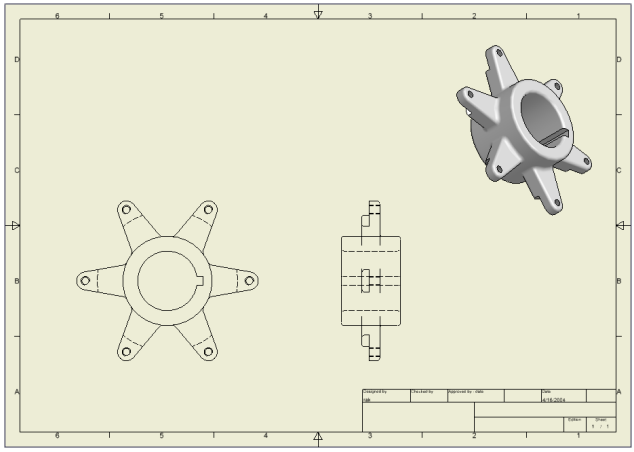

1. Move the cursor over the isometric view (avoid placing the cursor over lines in the view), **right-click** and then choose **Edit View**.
2. In the Drawing View dialog box, click the **Shaded** button and then click the **Options** tab.
3. In the upper–right corner, clear the **Tangent Edges** check box, and then click **OK**.

Adding a Section View

You can also easily create section views.

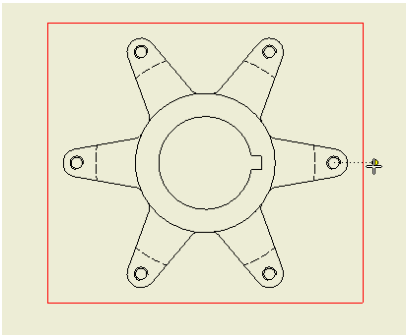

1. On the Panel bar, click the **Section View** tool.

2. To identify the parent view, select the front view (the view in the lower-left corner of the sheet).

   Next, you define the location of the section line in the parent view.

To identify the position of the horizontal section line:

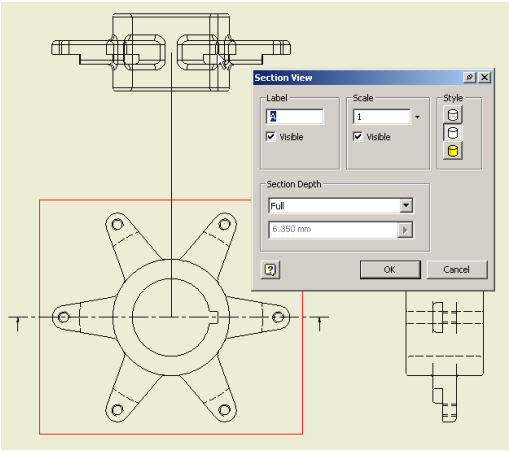

1. Move the cursor over the center of the hole in the flange, as shown in the image on the upper right. A green dot is displayed.

2. Move the cursor to the right of the hole (a dotted line is displayed as you move the cursor) and then click to define the start point of the section line.

3. Move the cursor to the left side of the front view. When the cursor is outside the left flange and the preview of the line is horizontal, click to define the endpoint of the section line.

   Tip: When sketching the line, ensure that the horizontal constraint is displayed next to the line before you click the second point of the line.

4. To finish defining the horizontal section line, **right-click** in the graphics window and choose **Continue.**

5. To place the section view, click the location above the front view.

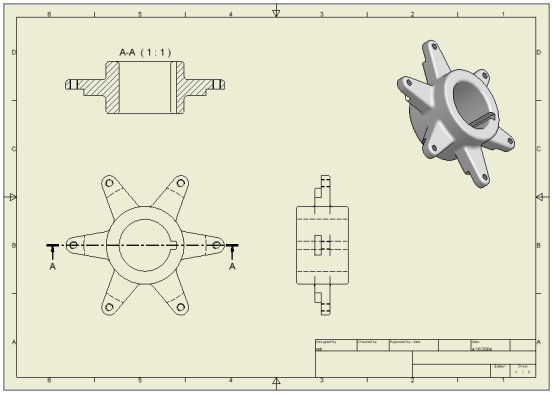

Note: If the section view does not go completely through the front view, you can easily correct this by dragging the end of the section line to the left. The section view automatically updates after you adjust the location of the section line.

Adding Dimensions

Rather than creating dimensions from scratch, you can use the dimensions that define the 3D part.

To retrieve the model dimensions for a specific drawing view:

1. Move the cursor in the front view (lower-left corner of the drawing sheet), **right-click**, and then choose **Retrieve Dimensions**.

2. In the Retrieve Dimensions dialog box, click the **Select Parts** option and then select any line in the front view.

   The model dimensions appropriate for the front view of the part are displayed.

3. In the Retrieve Dimensions dialog box, click **Select Dimensions**.

4. To identify the dimensions you want to keep, individually select the ∅**40.00**, ∅**60.00**, **R6.00**, **20.00**°, and the driven dimension **(55.08)** (the value of your driven dimension may differ).

5. In the Retrieve Dimensions dialog box, click **OK**.

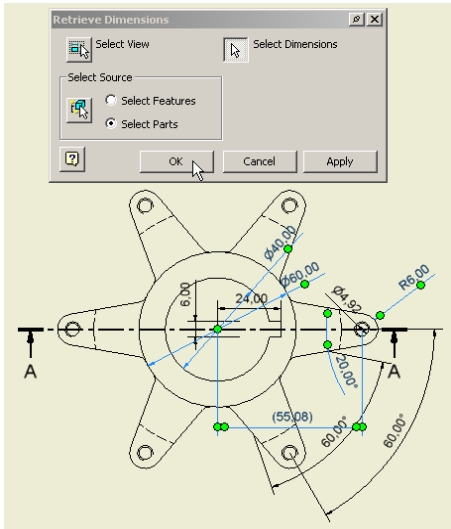

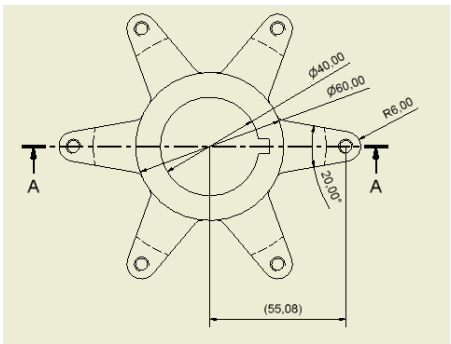

The dimensions in your drawing are probably superimposed over the part geometry. You can reorient the dimensions simply by dragging them to a new location.

You can also use the **Zoom All**, **Zoom Window**, and **Pan** tools to adjust your viewing orientation.

Next, you can add some baseline dimensions to the section view. The dimensioning tools, as well as other drawing annotation tools, are also conveniently located on the Panel bar.

To display drawing annotation tools on the Panel bar:

- Click the title bar (or right-click the background) on the Panel bar and choose **Drawing Annotation Panel**.



To add baseline dimensions to the section view:

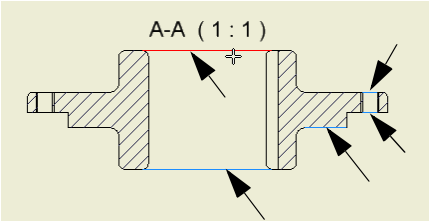

1. Zoom in on the section view.
2. On the Panel bar, click the **Baseline Dimension Set** tool.
3. In the section view, select the five horizontal lines shown in the image to the right.
4. **Right-click** and choose **Continue**.
5. Click to the right of the view to place the baseline dimensions.
6. **Right-click** and choose **Done** to quit the Baseline Dimension Set tool.

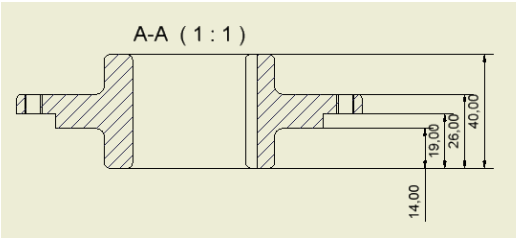

Working with Styles and Layers

With Autodesk Inventor software, you can instantly change the formatting of individual objects or an entire document, while ensuring consistency with your company standards. Styles make it easy to format characteristics such as font size, color, standards, and linetype. Layers, a familiar and powerful tool popularized by AutoCAD, enable you to quickly control the visibility, color, linetype, and lineweight of objects.

First, you use the Select Layer tool to control the visibility of objects in your drawing.

1. On the Standard toolbar, click the **down–arrow** next to the **Select Layer** drop–down list.
2. In the list, click the light bulb symbols next to the **Hatch (ISO)** and **Dimension (ISO)** entries.

   The hatch and dimensions are no longer visible in your drawing.
3. Repeat this process to turn the visibility of the hatch and dimensions back on.

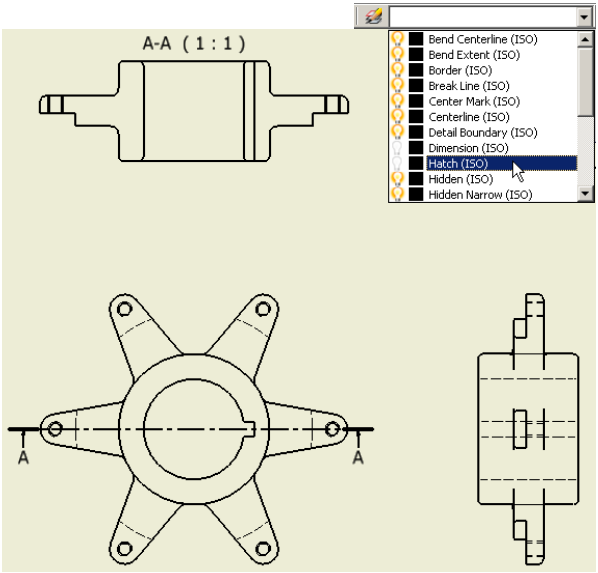

To change the color of the dimensions:

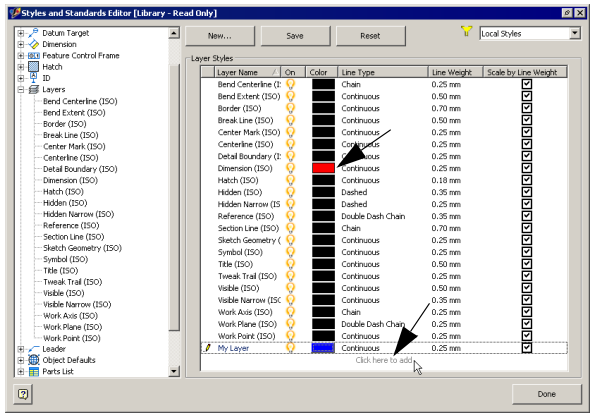

1. On the Standard toolbar, click the **Edit Layers** tool.

2. In the Styles and Standards Editor dialog box, click the **Color** for **Dimension (ISO)**.

3. In the Color dialog box, choose **Red** and then click **OK**.

   The color for the Dimension (ISO) layer is now red.

   Next, you create a new layer and move a dimension to that layer.

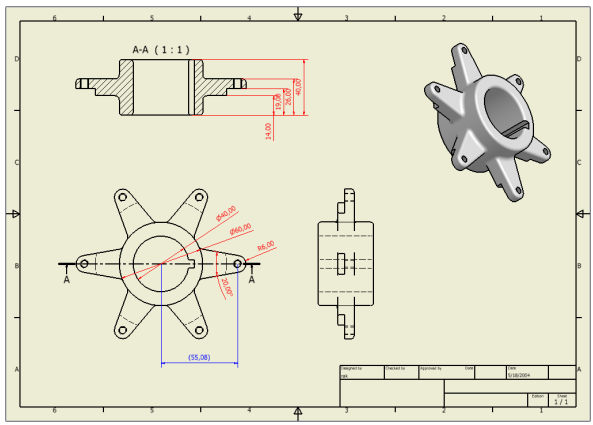

1. At the bottom of the Styles and Standards Editor dialog box, click **Click here to add**.

2. Type the name **My Layer**, change the color to **Blue**, and ensure the linetype is set to **Continuous**.

3. At the top of the Styles and Standards Editor dialog box, click **Save** and then click **Done**.

   To move a dimension to the new layer:

1. In the graphics window, select the referenced dimension (55,08) in the lower–left view.

2. On the Standard toolbar, click the **Select Layer** drop–down, scroll to the bottom, and then choose **My Layer**.

   The dimension color changes to the color you defined on your custom layer.

Saving Your Production Part Drawing

To save your production drawing of the carrier part:

1. On the Standard toolbar, click the **Zoom All** tool, and then click the **Save** tool.

2. In the Save As dialog box, ensure the file name is ***_My_Carrier.idw*** and then click **Save**.

3. Close the *_My_Carrier.idw* drawing window and then close the *_My_Carrier.ipt* part window.

Working with Multiple Parts in an Assembly

Until now, you have been working primarily with one part, the carrier for the sprocket. At the start of this test drive, you opened and briefly examined the go–cart assembly. Next, you incorporate your carrier part into that assembly design.

Working with a Subassembly

Autodesk Inventor provides a flexible assembly design environment, enabling you to use individual parts or organize groups of parts into subassemblies. For example, in the go–cart assembly, the rear axle is a subassembly comprising multiple parts. Next, you open the rear axle subassembly and incorporate your carrier part into the design.

After closing the carrier part and drawing windows, the final remaining window should be the *_Start_Go_Cart.iam* assembly file.

1. On the Standard toolbar, click the **Zoom All** tool.

2. In the graphics window, select one of the wheels on the rear axle.

   Notice the entire rear axle geometry is highlighted.

3. In the graphics window, **right-click** and select **Find in Browser**.

   The Browser automatically scrolls to Rear Axle Assy:1 and highlights the entry.

4. In the Browser, click the **plus (+) sign** in front of **Rear Axle Assy:1** to expand the display.

   The Rear Axle Assy:1 subassembly is defined by the parts and other subassemblies nested under the Rear Axle Assy:1entry. Notice the difference between a part icon and a subassembly icon in the Browser. Other icons are discussed later in this test drive.

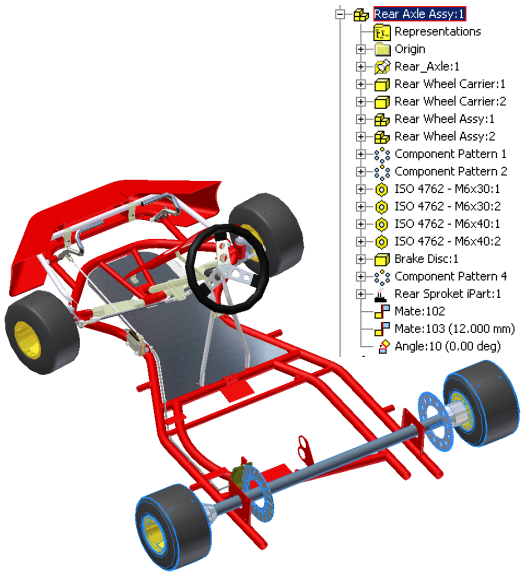

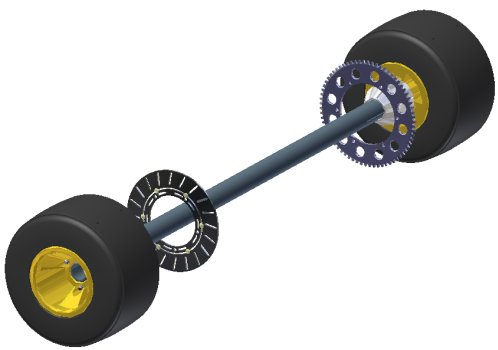

To simplify the design process, you open the rear axle subassembly in a separate window.

- In the Browser (or in the graphics window), with the **Rear Axle Assy:1** highlighted, **right-click** and choose **Open**.

Placing Components in an Assembly

With Autodesk Inventor, you can create parts in the context of an assembly, or place existing parts into an assembly. Since your carrier already exists, you can simply place the part into the assembly.

1. Use the **Zoom Window** tool (or your mouse wheel) to zoom in on the sprocket.
2. On the Panel bar, click the **Place Component** tool.
3. In the Open dialog box, select ***_My_Carrier.ipt*** and then click **Open**.

   A preview of the part is positioned at the location of the cursor.
4. Move the cursor slightly below the sprocket and then click once to place one occurrence of the carrier.
5. In the graphics window, **right-click** and choose **Done**.

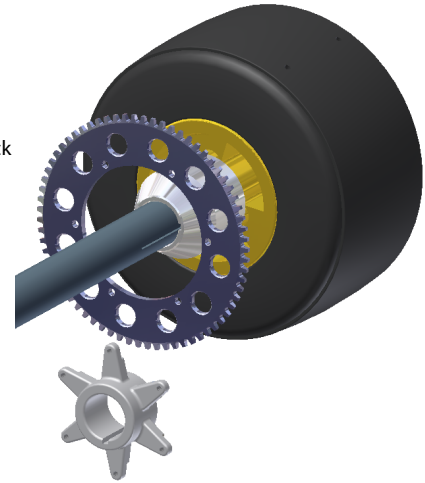

Positioning Parts in an Assembly

While designing the carrier part, you used sketch constraints to control the behavior between two objects in a sketch. In an assembly, you use assembly constraints to control the orientation between parts. Next, you use assembly constraints to orient the carrier.

- In the graphics window, drag the carrier. Notice that the part is free to move.

To orient the carrier:

1. On the Panel bar, click the **Constraint** tool.

   The Place Constraint dialog box is displayed with the default Mate option selected. The first constraint you create aligns the center axis of the carrier and the center axis of the axle.
2. To define the first selection set, select the inner cylindrical face of the carrier.

   The center axis of that face is highlighted.

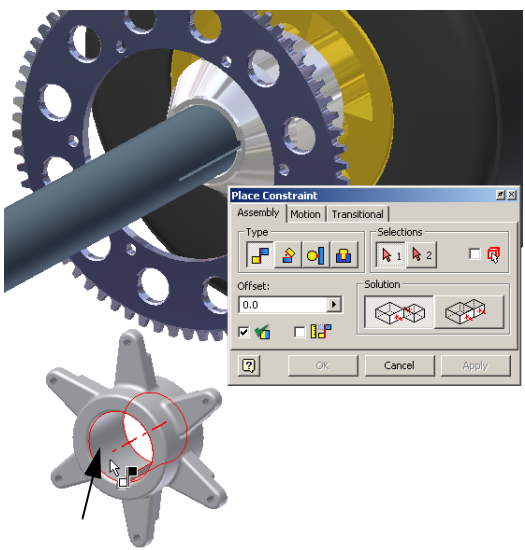

3. To define the second selection set, select the outer cylindrical face of the axle.

   The center axis of the axle is highlighted, and the carrier temporarily moves into position, aligning the two axes. If the volume on your system is not muted, you may also hear a click signifying placement of the part.

4. Click **Apply** in the Place Constraint dialog box to create the constraint.

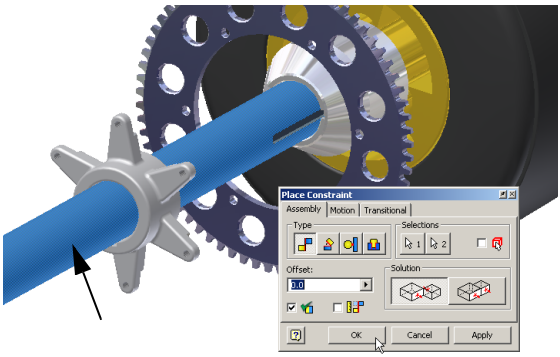

Next, you align the nearest face of the sprocket with the machined face of the carrier.

1. With the Constraint tool still active, press and hold the **F4** key and rotate your view so that you can see the opposite side of the carrier—similar to the image shown on the right.

   You can also press and hold the **F2** key to pan or the **F3** key to zoom in on the carrier.

2. Move the cursor over the machined face of the carrier (near the end of the flange) as shown to the right.

3. When the face is highlighted and an arrow pointing away from the surface is displayed, click to define the first set of geometry.

4. Press the **F5** key a few times to return to the previous view orientation. You can also use the **F4** key to rotate the view back to the previous view orientation.

5. To define the second set of geometry, select the face on the sprocket that is closest to the carrier, as shown on the right.

   The carrier temporarily moves into position, aligning the two faces.

6. Click **OK** to create the constraint and close the Place Constraint dialog box.

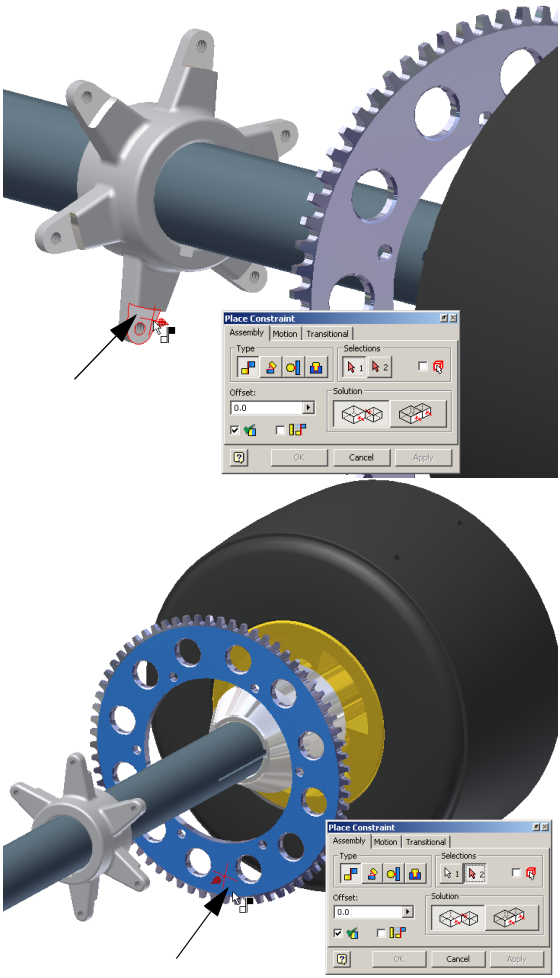

Each time you create an assembly constraint between parts, you reduce the ability of a part to move freely—commonly known as degrees of freedom.

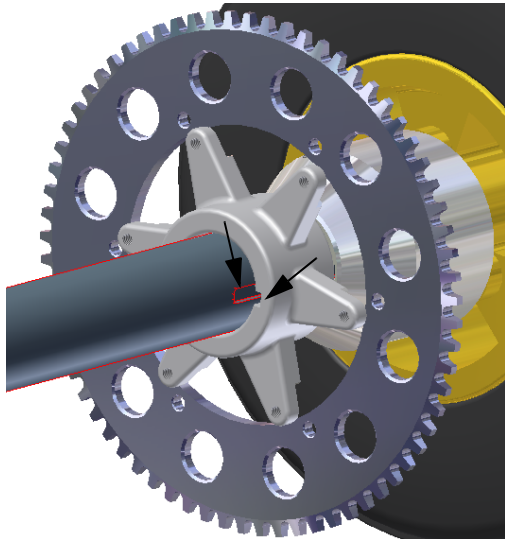

To visually check the remaining degrees of freedom on the carrier:

1. In the graphics window, drag one of the flanges of the carrier.

   Notice that the carrier is free to spin about the axis but cannot slide along the axis of the axle.

2. **Important:** Continue to drag the carrier until the keyway in the carrier and the keyway on the axle are nearly aligned.

Creating an Adaptive Link Between Parts

As you can see, the holes on the carrier do not align with the mounting holes in the sprocket. Next, you create an adaptive relationship between these two parts to correct this alignment. To further automate the design, you also ensure the number of flanges on the carrier are linked to the number of mounting holes in the sprocket.

First, you edit the carrier and make the length of the flanges adaptive.

To edit the part in the context of the assembly:

1. In the Browser, **double-click** on **_My _Carrier.ipt:1** to make the part active.

   Tip: You can also double-click the part in the graphics window to make it active.

   In the Browser, notice that all other parts in the assembly have a gray background and the features of the carrier part are now displayed. Also, in the graphics window, all parts other than the carrier are dimmed.

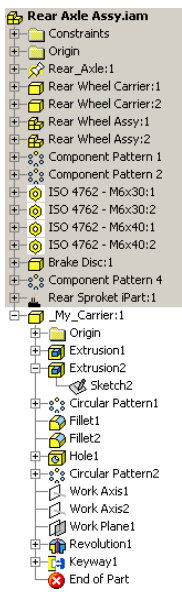

2. In the Browser, click the **plus (+) sign** next to the **Extrusion2** feature to display the sketch.

3. Move the cursor over **Sketch2** to highlight the sketch geometry in the graphics window.

   Notice that the length of the flange is shown as a driven dimension (in parentheses). This allows the length to fluctuate.

   Note: Driven dimensions are not required to make a feature adaptive. With Autodesk Inventor, any feature with an underconstrained sketch can be made adaptive.

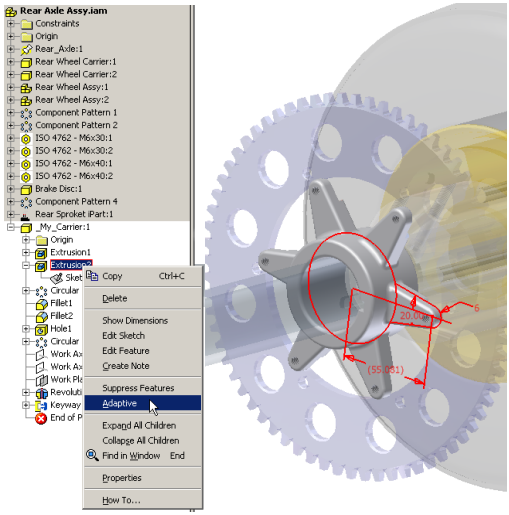

To make the length of the extruded flange adaptive:

- In the Browser, **right-click** on **Extrusion2** and choose **Adaptive**.

  In the Browser, notice that an adaptive symbol now appears next to the sketch, feature, and part.

Linking the Hole and Flange Patterns

While you are editing the carrier, you can also ensure that the number of mounting holes on the sprocket matches the number of flanges in the carrier. Predicting that the circular pattern for the mounting holes may be a shared design requirement for other parts, the designer of the sprocket exported, or shared, the parameter defining the number of holes. Next, you will derive the design of your carrier from the shared parameter in the sprocket.

To derive the exported parameter from the sprocket to the carrier:

1. On the Panel bar, click the **Derived Component** tool.

2. In the Open dialog box, select ***Rear Sprocket iPart.ipt***, and then click **Open**.

   The Derived Part dialog box is displayed. Notice the only items that are derived are the exported parameters.

3. Click **OK** to derive the exported parameters and close the Derived Part dialog box.

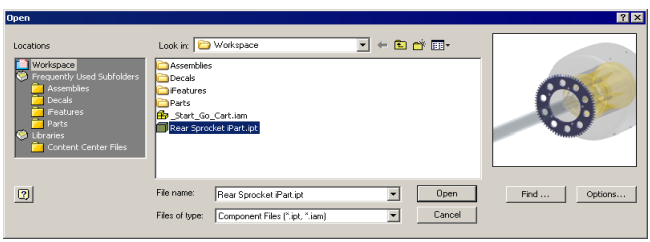

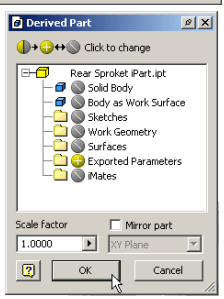

Next, you use the derived parameter to define the number of flanges.

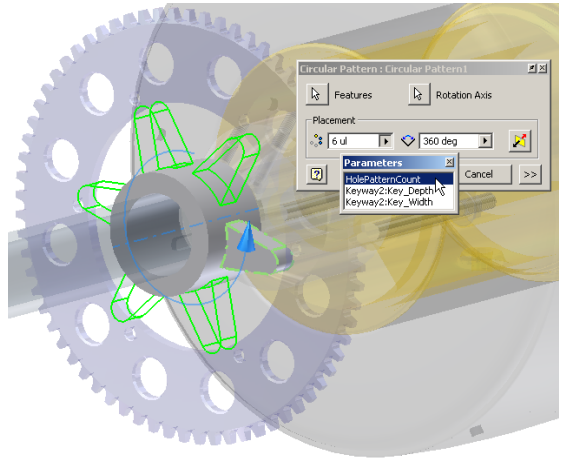

1. In the Browser, **right-click** on **Circular Pattern1** and choose **Edit Feature**.

2. In the Circular Pattern dialog box, click the **right arrow** next to the number of occurrences (6) and choose **List Parameters**.

3. In the Parameters dialog box, choose **HolePatternCount**.

   The derived parameter, HolePatternCount, is now used to define the number of flanges.

4. Click **OK** to finish editing the Circular Pattern1 feature and close the dialog box.

Constraining the Length of the Flanges

You are now finished editing the carrier part. Next, you return to the rear axle assembly and use assembly constraints to align the holes in the carrier with the mounting holes in the sprocket.

To return to the rear axle assembly:

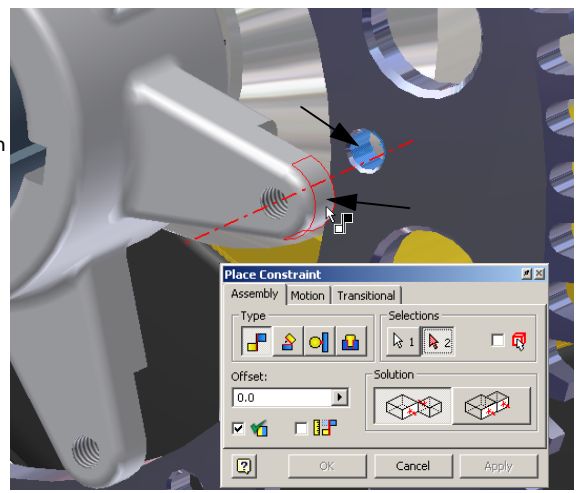

- In the graphics window, **right-click** and choose **Finish Edit.**

  Tip: You can also click the Return tool on the Standard toolbar.

  In the Browser, notice that the adaptive symbol appears next to **_My_Carrier.ipt:1**.

To finish constraining the carrier and align the holes:

1. Zoom in on the carrier flange nearest the keyway.

2. On the Panel bar, click the **Constraint** tool.

3. For the first set of geometry, select the cylindrical face at the tip of the flange on the carrier (the axis of the cylindrical face should be displayed).

4. For the second set of geometry, select the cylindrical face of the nearest hole on the sprocket (the axis of the hole should be displayed).

5. Click **OK** to create the constraint and close the Place Constraint dialog box.

After you have performed these steps, the extruded flange adapts to a length defined by the location of the mounting hole in the sprocket.



Using Standard Parts

Autodesk Inventor software includes a library of over 500,000 standard parts that comply with ISO, ANSI, DIN, and many other standards. This library saves you time by providing instant access to frequently used content, including fasteners, shaft parts, and steel shapes.

Next, you insert a socket head bolt that is used to fasten the sprocket to the carrier.

1. On the Browser title, click **Model** and then select **Library**.

   This switches the Browser to display all active standard part catalogs.

2. In the Browser, **double-click** on **Standard Parts**, then **Fasteners**, then **Screws and Threaded Bolts**, and finally **Socket Head Types**.

   The Browser now displays all available socket head–type fasteners.

   The bolt you need to insert is an ISO 4762 (Regular Thread) bolt. To find this bolt in the list:

3. Select one of the items in the list and then type the letter **I** (the first letter in ISO).

   The list automatically scrolls to the first entry beginning with the letter "I".

4. In the list, **double-click** on **ISO 4762 (Regular Thread)**. You may have to use the scroll bar at the bottom to find this entry.

5. Select a nominal diameter of **6 mm** and a nominal length of **12 mm**.

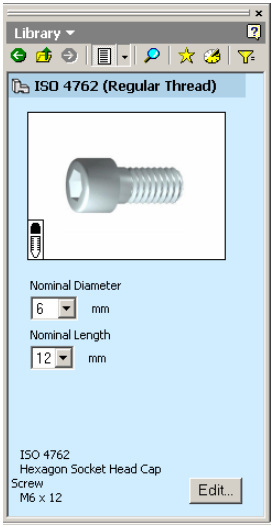

Inserting Standard Parts into Your Assembly

Now that you have identified the type of fastener that you want to use and have specified a size, you can insert the standard part into your assembly.

1. In the Browser, move the cursor over the preview of the bolt.

   As you move the cursor over the preview, the cursor image changes to an eyedropper. This is the symbol for the Autodesk i-drop® function.

2. **Drag** the preview of the bolt from the Browser into the graphics window.

3. Click once near the bottom of the sprocket to place one instance of the bolt.

4. In the graphics window, **right-click** and then choose **Done**.

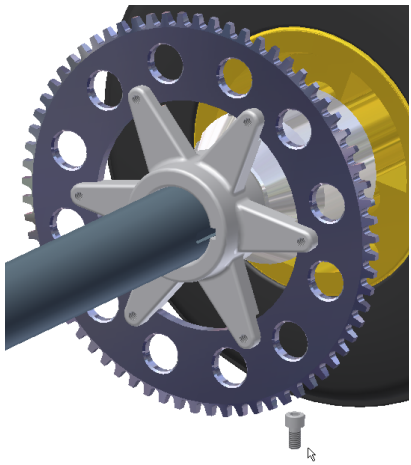

Positioning the Bolt

To position the standard bolt in the hole on the sprocket:

1. Use the **Rotate** tool to view the opposite side of the sprocket.

2. On the Panel bar, click the **Constraint** tool.

3. In the Place Constraint dialog box, click the **Insert** option.

4. Select the edge of the bolt where the thread meets the head, select the edge of the hole in the sprocket, as shown in the image to the right, and then click **OK**.

   The bolt snaps into place.

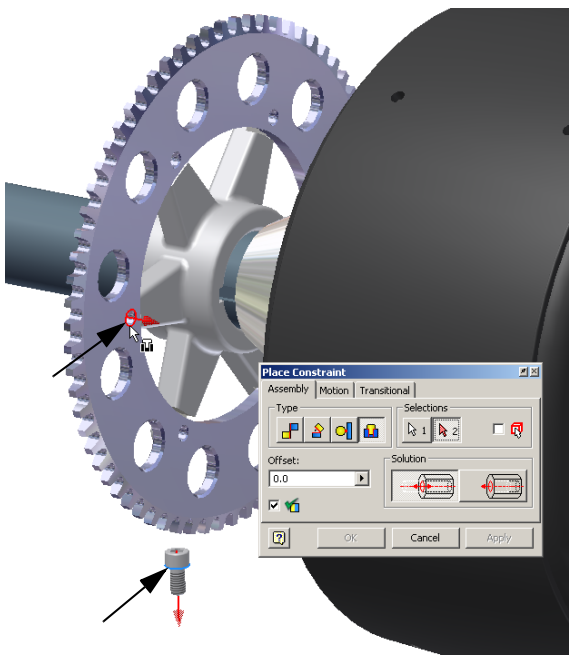

Creating a Bolt Pattern

Rather than placing and positioning six individual bolts, you can create a component pattern that is linked to the circular pattern on the sprocket.

1. On the Panel bar, click the **Pattern Component** tool.
2. In the graphics window, select the bolt.
3. In the Pattern Component dialog box, click the **Feature Pattern Select** button.
4. In the graphics window, select one of the mounting holes on the sprocket.

   The circular pattern feature on the sprocket is used to create an adaptive pattern of the bolt.
5. Click **OK** to create the bolt pattern and close the dialog box.

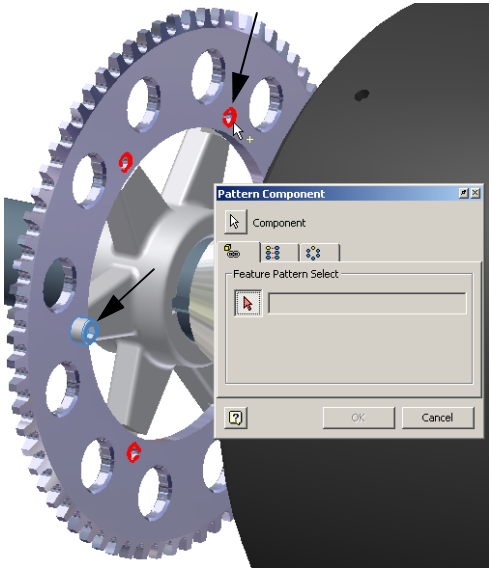

Before you continue, you should clean up a few things and save your design.

1. On the Browser title, click **Library** and then select **Model**.
2. On the Standard toolbar, click **Save**.
3. When you are prompted to save your changes to the assembly file and its dependents, click **OK**.

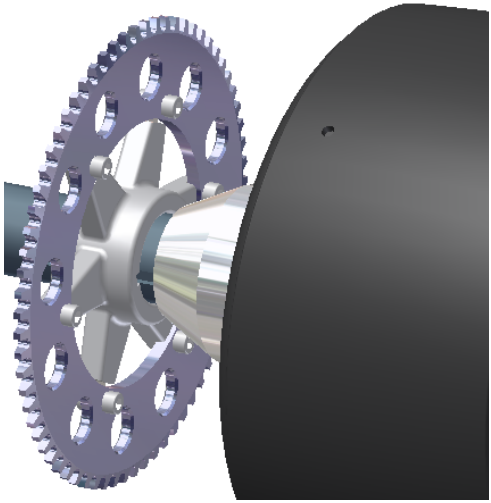

Animating the Assembly

In the next two sections, you see how you can use Autodesk Inventor 3D assemblies to quickly create technical illustrations, process sheets, training materials, part manuals, assembly instruction sheets, and even videos to train assembly teams on the manufacturing floor.

The Presentation Environment

Now you are going to switch to a new working mode, the presentation environment. In this environment, you can modify the orientation or visibility of the parts in your assemblies without affecting the actual assembly files. You can then use the presentation files to create assembly drawings with assembled or exploded views on the same drawing sheet, or even create animations that show how parts should be assembled or disassembled.

To open the presentation file that has already been started for you:

1. On the Standard toolbar, click the **Open** tool.

2. In the Open dialog box, select ***_Rear_Axle_Presentation.ipn*** and then click **Open**.

   The presentation file of the rear axle assembly is opened and the Panel bar now displays the Presentation tools.

3. Use the **Zoom All** tool to see all the parts.

   The parts that define the right wheel have already been exploded to show the individual parts.

4. In the Browser, click the **plus (+) sign** next to the **Explosion1** and **Rear Axle Assy.iam** entries.

   Notice that the part and assembly structure is shown in the Browser. This structure is defined by the assembly file.

5. Use the **Rotate** tool to rotate your view to an orientation similar to the image shown on the lower right.

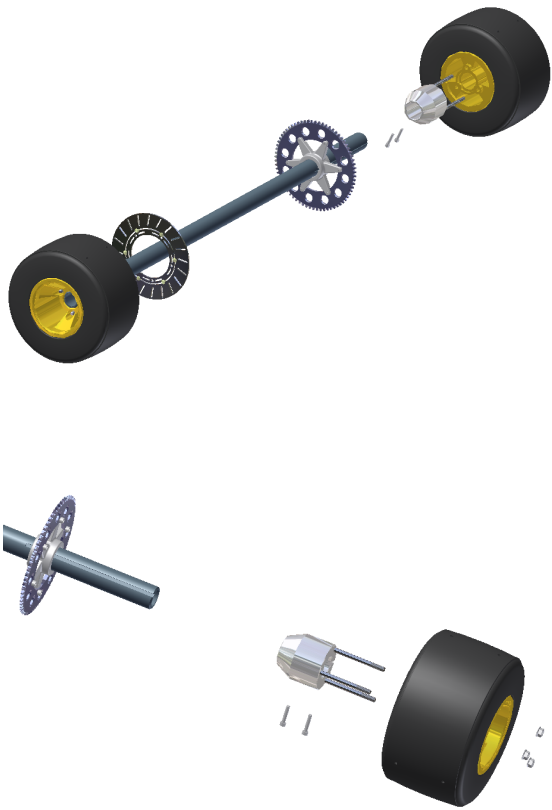

Repositioning the Bolts

Next, you are going to finish the exploded view of the rear axle by repositioning the sprocket, carrier, and bolts. In Autodesk Inventor, this process is called tweaking components. You could later use this exploded view to create a drawing that can appear in a bill of materials (BOM) sheet or on a page of the assembly instructions.

To tweak the position of the bolts:

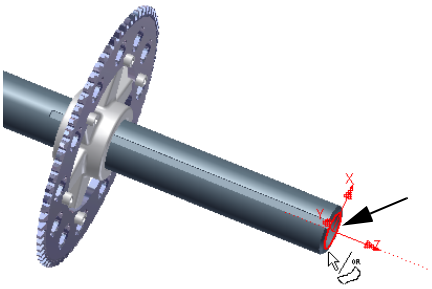

1. On the Panel bar, click the **Tweak Components** tool.

   To define the direction of the tweak:

2. Move the cursor over the end of the axle to display a preview of the triad.

3. When the Z direction of the triad preview is aligned with the center of the axle, click to accept.

   To define the components to tweak:

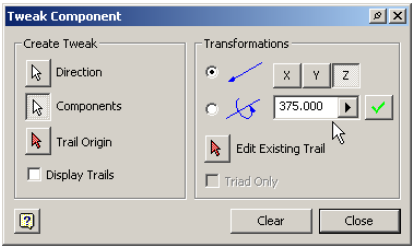

4. In the Browser, select the first instance of the bolt, **ISO 4762 (Regular Thread) M6 x 12:1**, press and hold the Shift key, and then select the last instance of the bolt, **ISO 4762 (Regular Thread) M6 x 12:6**. The six bolts should be highlighted in the Browser and in the graphics window.

   To tweak the position of the bolts:

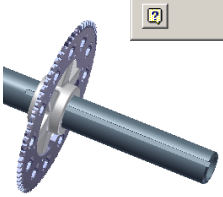

5. Clear the **Display Trails** check box in the Tweak Component dialog box.

6. Ensure the **Z** option is selected in the Tweak Component dialog box (the Z arrow on the triad should also be blue).

7. With your cursor in an empty area of the graphics window, drag the six bolts in a direction along the center axis of the axle and toward the right wheel.

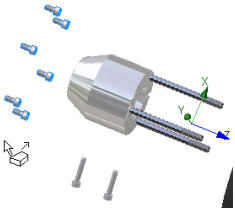

8. To define the exact distance of the tweak, in the Tweak Component dialog box, double-click the current value, type **375 mm**, and then click the **green check mark** to accept that value.

Repositioning the Sprocket and Carrier

Next, you move the sprocket in the same direction as the bolts.

1. With the Tweak Component dialog box still displayed, click **Clear** to define a new set of components for the next tweak sequence.

2. Select the end of the axle again to define the direction. The Z direction of the triad should be aligned with the center axis of the axle.

   To tweak the location of the sprocket:

3. In the graphics window, select the sprocket and then drag its location to the right.

4. To define the exact distance of the tweak, type **300 mm** in the Tweak Component dialog box, and then click the **green check mark** ✓ to accept that value.

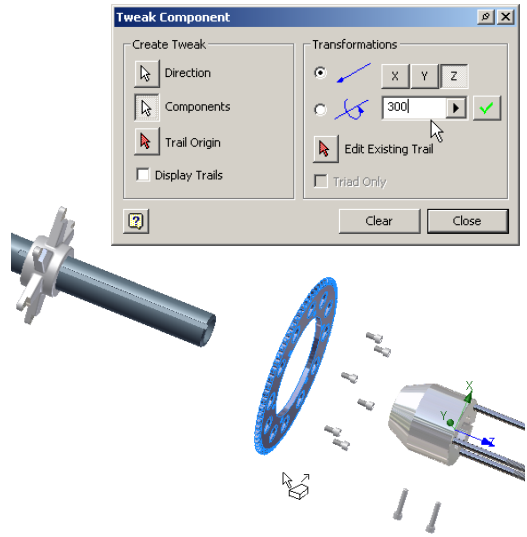

Finally, you move the carrier.

   To define the component to tweak, you can deselect the sprocket and then select the carrier.

1. With the Tweak Component dialog box still displayed, press and hold the **Ctrl** key, and then select the sprocket to remove this component from the selection set.

2. To add the carrier, release the **Ctrl** key and then select the carrier.

   To tweak the location of the carrier:

3. Drag the carrier to the right between the end of the axle and the sprocket.

4. To define the exact distance of the tweak, type **250 mm** in the Tweak Component dialog box, and then click the **green check mark** ✓ to accept that value.

5. To finish tweaking components, click **Close**.

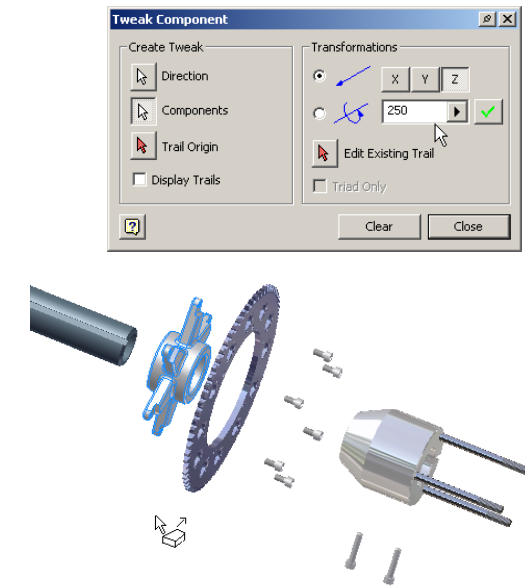

Animating the Assembly

You can now create an animation of the assembly process.

1. On the Panel bar, click the **Animate** tool.

2. In the Animation dialog box, type **10** for the interval and then click **Apply**.

   Note: The interval determines how many steps are displayed for each tweak.

3. To watch an animation of how to assemble the parts, click the **Play Forward** button.

4. To watch an animation of how to disassemble the parts, click the **Play Reverse** button.

   Notice during playback of the animation that you can incorporate saved view orientations. This is convenient when components associated with a specific tweak are hidden from your current view.



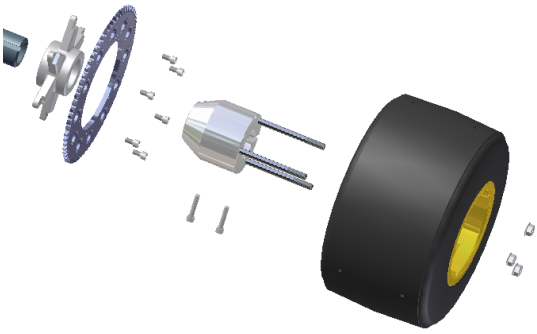

5. Click **Cancel** to close the Animation dialog box.

6. On the Standard toolbar, click **Save** and then **OK** to save your modifications to the presentation file and its dependents.

Creating an Assembly Drawing

Next, you create an assembly drawing of the rear axle assembly using the presentation file and assembly file you have been working with.

Starting a New Drawing

To start a new drawing for your assembly drawing:

1. On the Standard toolbar, click the **New** tool.

2. In the Open dialog box, select ***Standard.idw*** and then click **Open**.

A new drawing with an A3 sheet size is created.

Changing the Default Sheet Size

The assembly drawing needs a slightly larger sheet size. Next, you change the sheet size from A3 to A2.

To change the sheet size:

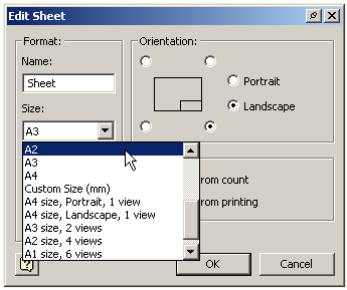

1. In the Browser, **right-click** on **Sheet:1** and choose **Edit Sheet**.

2. In the Edit Sheet dialog box, select **A2** from the Size drop–down list and then click **OK**.

   The sheet size is updated to A2.

Generating the First View

The first drawing view you create is an exploded view of the rear axle assembly.

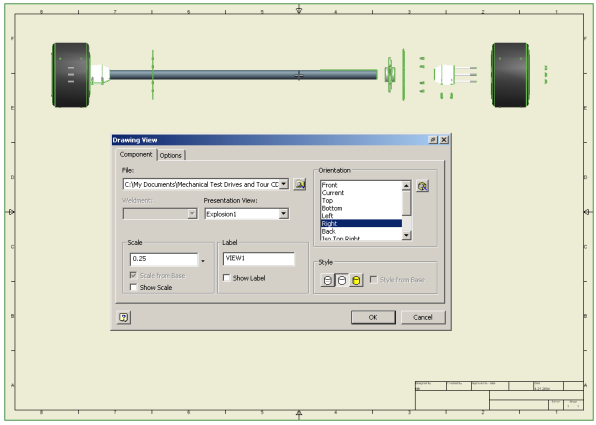

1. On the Panel bar, click the **Base View** tool.

   By default, Autodesk Inventor suggests using the contents of other open parts, assemblies, or presentations for the drawing view.

   To identify which dataset to use for the base view:

2. In the Drawing View dialog box, click the File drop–down list and choose **_Rear_Axle_Presentation.ipn**.

3. In the Drawing View dialog box, under Orientation select **Right**, change the scale to **0.25** (shown as **1:4** in the drop down list), and ensure Style is set to **Hidden Line Removed** .

4. To place the drawing view on the sheet, click the approximate location shown in the image above.

   Tip: If the dialog box is in the way, simply drag it to a new location using the title bar at the top.

Creating Another View of the Assembly

Next, you create an assembled view of the rear axle assembly on the same drawing sheet.

1. On the Panel bar, click the **Base View** tool again.
2. In the Drawing View dialog box, click the File drop–down list and then choose ***Rear Axle Assy.iam***.
3. In the Drawing View dialog box, under Orientation select **Iso Top Right**, change the scale to **0.25** (shown as **1:4** in the drop–down list), and change the Style to **Shaded**.
4. To place the drawing view on the sheet, click the approximate location shown in the image on the right.

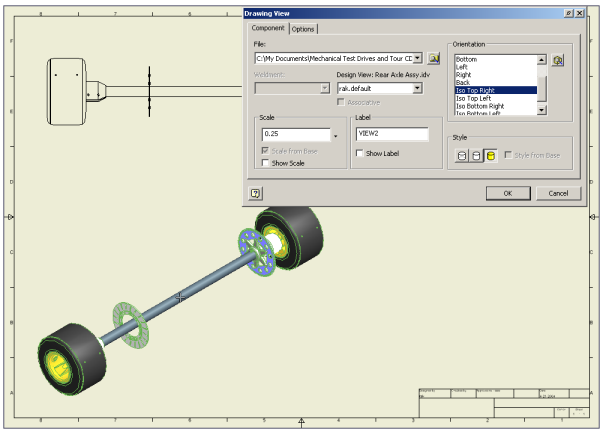

Creating a Detail View of the Sprocket

Since the assembly view of the rear axle is rather small, you can create a detail view that shows just the sprocket area.

1. On the Panel bar, click the **Detail View** tool.
2. To identify the view to use as the base view, click anywhere in the lower–left isometric view.
3. In the Detail View dialog box, change the Scale to **.75** and then select the **Shaded** style.
4. To define the circular boundary of the view, click once near the center of the sprocket and then click again when the preview circle is slightly larger than the sprocket.

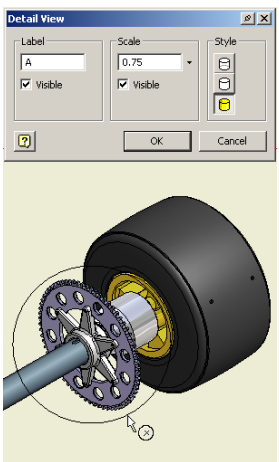

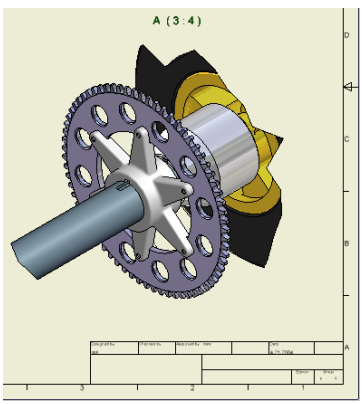

5. Place the drawing view on the right side of the sheet just above the title block.

Creating a Broken View

The exploded view of the rear axle assembly is an ideal situation for a broken view.

To convert the exploded view to a broken view:

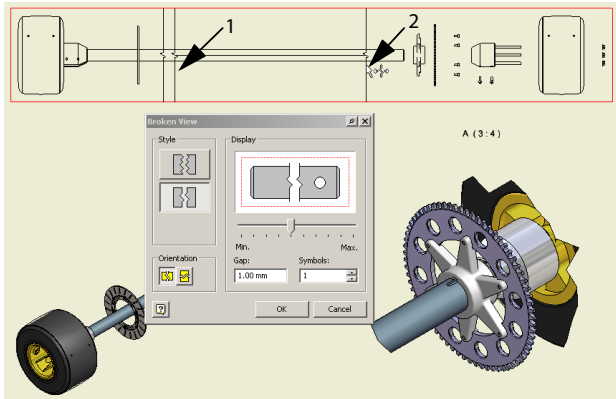

Note: Ensure that no drawing views are selected (red borders should not appear on any of your drawing views) before starting the next step.

1. On the Panel bar, click the **Broken View** tool.

2. To define the view to be broken, select the top exploded view.

   To define the left and right boundaries to be removed from the view:

3. Click just to the right of the brake disc (arrow 1), and then click just to the left of the right end of the axle (arrow 2).

   The view is converted to a broken view and break symbols identify the section that was removed.

Adding Balloons

To identify all the parts in the exploded view of the rear axle, you can add balloons. Autodesk Inventor software automates the process of creating balloons on your assembly drawings.

Before you add balloons, let's clean up the drawing sheet and move the broken view slightly to the left.

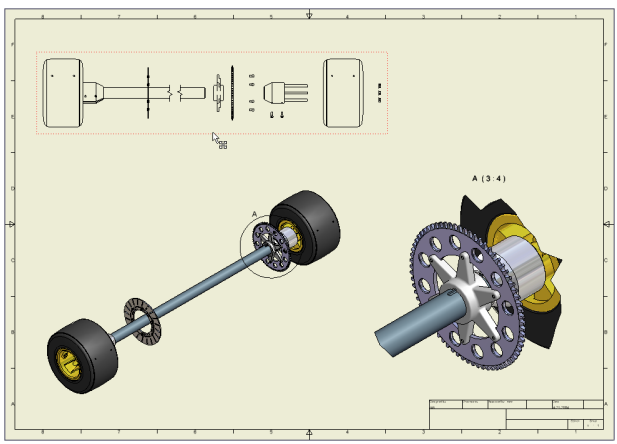

1. Click near the center of the broken view (without selecting any view geometry).

   A red border appears around the perimeter of the view.

2. Drag the drawing view border and place the view near the upper–left corner of the sheet as shown in the image on the right.

To automatically add balloons to the broken view:

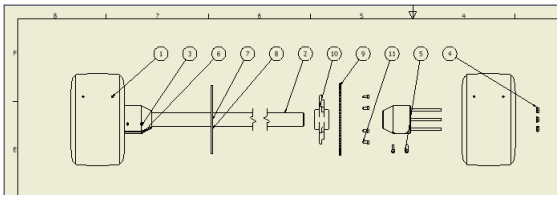

1. Click the title of the Panel bar and then choose **Drawing Annotation Panel**.
2. On the Panel bar, click the **down arrow** next to the Balloon tool and then click the **Auto Balloon** tool.
3. In the graphics window, select the broken view you just moved.
4. To identify the parts you want to balloon, drag a rectangle around all the parts in the view.
5. To define the balloon placement, click the **Select Placement** button, click the **Around** option, and then move the cursor around the drawing view.

   Notice the balloons dynamically move about the center of the view.
6. Click the **Horizontal** option, place the balloons above the view, and then click **OK** to create the balloons.

   Balloons are created and automatically distributed along the top of the broken view.

Even though you created the balloons as a set, you can modify balloons individually.

To modify the arrow on a balloon:

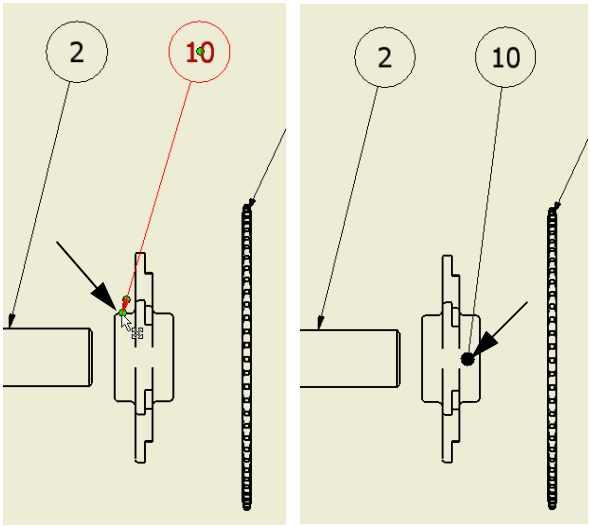

1. Use the **Zoom Window** tool to zoom in on the balloon for the carrier.
2. Move the cursor over the arrow on balloon 10 (the balloon for the sprocket).
3. Drag the tip of the arrow to the center of the hub so that the arrow is not pointing to any part geometry.

   Since the balloon no longer points to geometry on the part, the balloon arrow changes to a dot.

Adding a Parts List

Since Autodesk Inventor software manages information associated with parts and assemblies, you can easily generate and update accurate parts lists in a fraction of the time required by traditional 2D methods—virtually eliminating human error. Changes to the assembly are associative, so the parts list is updated automatically.

To include a parts list with your balloons:

1. On the Panel bar, click the **Parts List** tool.
2. Click once on the broken view.

   A rectangular preview of the parts list boundary now appears, enabling you to identify a location.
3. Move the cursor near the right side of the drawing sheet. As the upper-right corner of the preview boundary nears the upper-right corner of the border, it temporarily snaps into place.
4. Click to accept the location and create the parts list.

Parts List

ITEM	QTY	PART NUMBER	DESCRIPTION
1	2	Rear Wheel Assy	Rear Wheel Assembly
2	1	Rear_Axle	Rear Axle
3	2	Rear Wheel Carrier2	Rear Wheel Carrier
4	6	ISO 4161 - M8	Hex Nut with Flange
5	2	ISO 4762 - M6x30	Hexagon Socket Head Cap Screw
6	2	ISO 4762 - M6x40	Hexagon Socket Head Cap Screw
7	1	Brake Disc	Brake Disc
8	6	Floater Rivet	Floater Rivet
9	1	Rear Sprocket iPart	Rear Sprocket iPart
10	1	_My_Carrier	
11	6	ISO 4762 - M6 x 12	Hexagon Socket Head Cap Screw

Printing and Saving Your Assembly Drawing

If you have a printer or plotter available, you can now print your drawing the same way you print documents in other Windows applications. After printing, you can save your assembly drawing.

1. To print your drawing, from the File menu, choose **Print**.
2. To save your drawing, on the Standard toolbar, click the **Save** tool, type the name ***_Rear_Axle_Drawing.idw***, and then click **Save**.

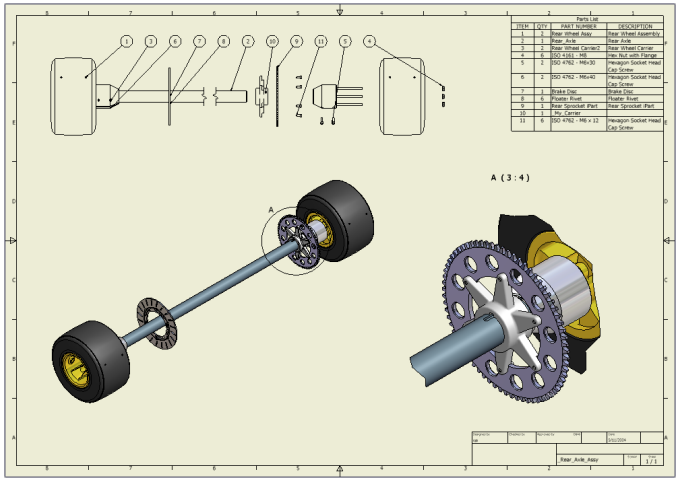

Since you are finished with the assembly drawing and presentation, you can now close the files.

- **Close** the ***_Rear_Axle_Drawing.idw*** and ***Rear Axle Presentation.ipn*** files.

Making Revisions to the Design

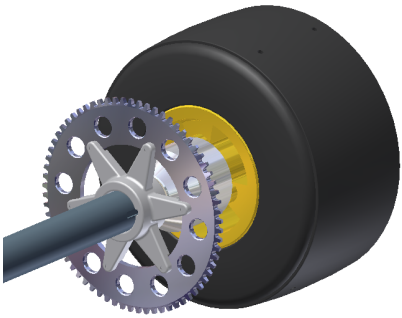

A slightly smaller sprocket diameter provides a better balance between low-end torque and high-end speed.

Next, you modify the sprocket from the rear axle assembly window.

- If the *Rear Axle Assy.iam* window is not the active window, then from the Window menu, choose **Rear Axle Assy.iam**.

Using iParts—Intelligent Family of Parts

When you look closely at some parts in an assembly, many of these parts are nearly identical, differing only slightly in their size or the number of features. With Autodesk Inventor software, you can use iParts, or intelligent parts, to design the shape once, and then define many different versions of the part using a spreadsheet.

The sprocket was designed as an iPart, with the large version inserted into the rear axle assembly. Let's see how a smaller version of the sprocket affects the rest of the rear axle assembly design.

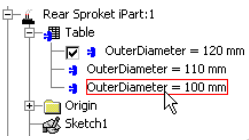

To change the sprocket to a smaller version, you must first edit the part. To edit the part in the context of the assembly:

1. In the graphics window, **double-click** the sprocket.

   All other parts in the assembly are dimmed and the Browser now shows the feature structure of the part.

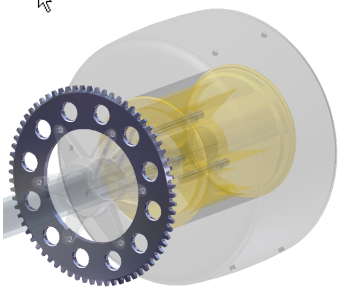

2. In the Browser, click the **plus (+) sign** next to **Table**.

   All the versions of the iPart are displayed in the table. The current version of the iPart is identified with a check mark.

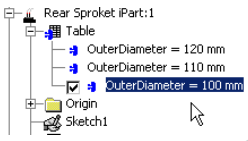

3. To change the version, **double-click** on **OuterDiameter = 100 mm**.

   The sprocket changes to the smaller version. Also notice that the number of mounting holes has changed from six to five.

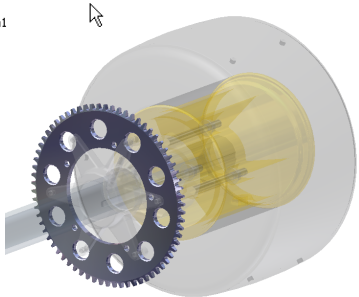

4. To finish editing the sprocket, on the Standard toolbar, click the **Return** tool.

   The rear axle assembly automatically updates to reflect the new version of the sprocket. Notice that the carrier adapts to the new sprocket. Not only has the flange length changed to reflect the smaller sprocket diameter, but the number of flanges also changed to adapt to the new number of mounting holes.



5. Use the **Rotate** tool to view the opposite side of the sprocket.

   Notice the number of bolts in the component pattern has also changed to five.

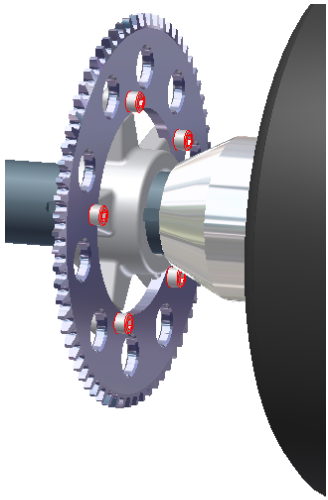

The Autodesk Inventor software design engines for parametrics and adaptivity help reduce design steps by propagating changes instantly throughout the design. And, Autodesk Inventor saves you time because you can build intelligence into your designs.

Using iMates—Intelligent Mating of Components

Autodesk Inventor enables you to save the assembly constraints used to position a component in an assembly with the part design. You can then use those constraints, called iMates, to automate the placement of that part in other assemblies, or even in the same assembly.

Next, you insert another instance of the carrier and automatically constrain it to the brake disc using iMates.

To infer iMates on the carrier:

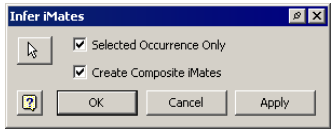

1. In the Browser, **right-click** on **_My_Carrier:1** and choose **Infer iMates**.

2. In the Infer iMates dialog box, ensure the **Selected Occurrence Only** and **Create Composite iMates** options are checked and then click **OK**.

   The constraints used to orient the carrier to the axle and sprocket are now saved as iMates in the part file.

Next, you customize the iMates using a unique name.

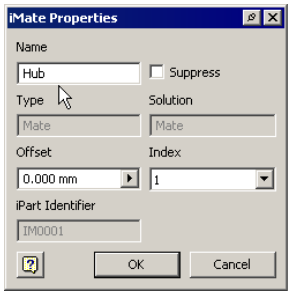

1. In the Browser, **double-click** on **_My_Carrier:1** to edit the part.

2. Click the **plus (+) sign** next to **iMates** to expand the display, **right-click** on **iMate:1** and then choose **Properties**.

3. In the iMate Properties dialog box, change the name to **Hub** and then click **OK**.

4. On the Standard toolbar, click the **Return** tool to finish editing the part and return to the assembly.

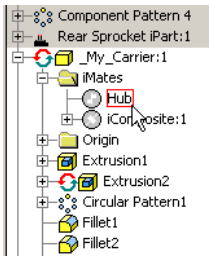

An identical set of iMates also exist on the brake disc. Next, you place another instance of the carrier and use the iMates to automatically constrain it to the brake disc.

Before you place another instance of the carrier:

- In the graphics window, **right-click** on the carrier part and then choose **Enabled**.

  Tip: By disabling the existing instance of the carrier, you are ensuring the second instance does not automatically constrain to the first.

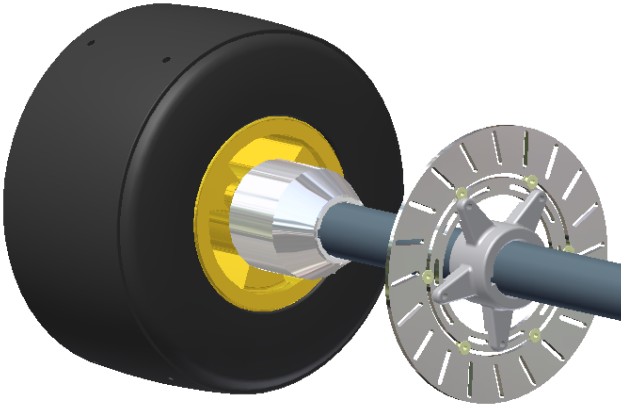

To place another instance of the carrier using iMates:

1. On the Panel bar, click the **Place Component** tool.

2. In the Open dialog box, select **_My_Carrier.ipt**.

3. In the lower–left corner of the dialog box, select the **Use iMate** check box and then click **Open**.

   Another instance of the carrier is automatically constrained to the brake disc using iMates.

Finishing the Rear Axle Design

To finish the design of the rear axle, you can place and constrain the fasteners that attach the carrier to the brake disc. You use the same fasteners that you used to attach the carrier to the sprocket.

To insert another ISO 4762 (Regular Thread) M6 x 12 bolt from the standard parts library:

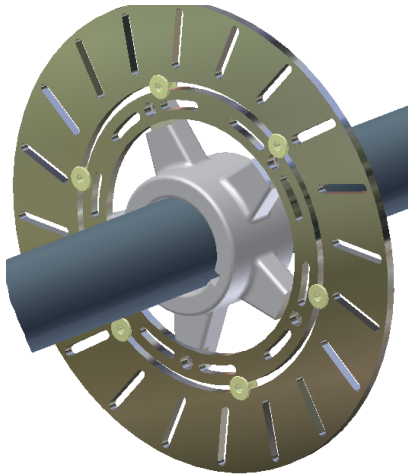

1. Use the **Rotate** tool to view the left side of the brake disc.
2. On the Browser title, click **Model** and then select **Library**.

   The ISO 4762 (Regular Thread) M6 x 12 bolt is the last used standard part.
3. **Drag** the preview of the bolt from the Browser into the graphics window.
4. Click once near the bottom the brake disc to place another instance of the bolt.
5. In the graphics window, **right-click** and choose **Done**.
6. On the Browser title, click **Library** and then select **Model** to return to the model display.

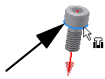

Using Alt-Drag to Constrain the Bolt

Another convenient way to constrain parts is using Alt-drag.

To constrain the location of the bolt using Alt-drag:

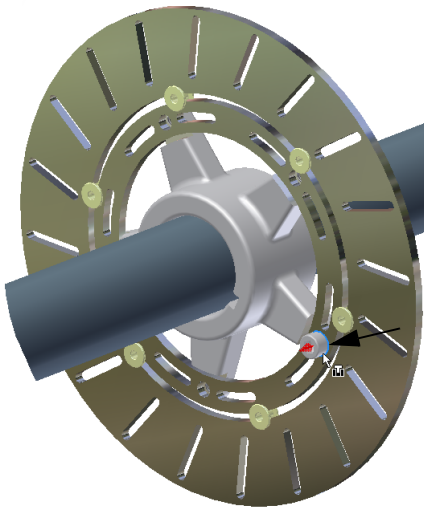

1. In the graphics window, select the bolt you just placed.

   Two constraint symbols appear on the bolt.
2. Press and hold the **Alt** key and then select and drag the Insert Constraint symbol on the bolt.

   As you drag the bolt over geometry on the brake disc, the bolt temporarily snaps to those locations.
3. Move the cursor over the hole in the brake disk as shown in the image to the right.
4. When the bolt snaps into the hole, release the mouse button to create the constraint.

Creating Another Bolt Pattern

Finally, you create another bolt pattern, similar to the pattern on the sprocket.

1. On the Panel bar, click the **Pattern Component** tool.
2. In the graphics window, select the bolt.
3. In the Pattern Component dialog box, click the **Feature Pattern Select** button.
4. In the graphics window, select one of the mounting holes on the brake disc.

   Note: The curved slots on each side of the hole are also highlighted.
5. Click **OK** to create the bolt pattern and close the dialog box.
6. On the Standard toolbar, click the Zoom All tool.
7. To enable the first instance of the carrier, in the Browser, **right-click** on **_My_Carrier:1** and then choose **Enabled**.

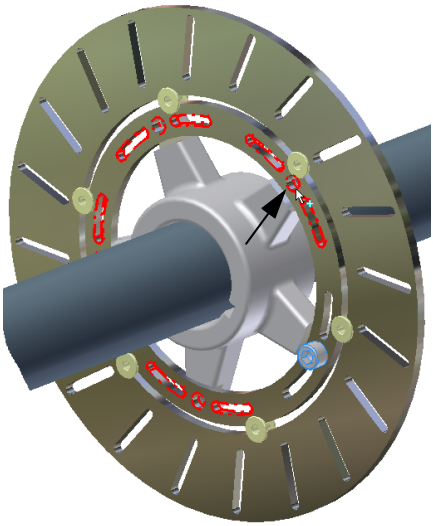

Reviewing the Updated Drawings

Autodesk Inventor maintains full associativity between the 3D models and the drawings. Since you have modified the part and assembly models, the drawings automatically reflect those changes. This helps eliminate errors and the need for manual checking that would otherwise cost you time and money.

To review the updated part drawing:

1. From the File menu, choose **_My_Carrier.idw** from the list of recently used files.

   The drawing now shows the modified status of the model.
2. **Save** the updated drawing and **Close** the file.

Next, you open and review the updates to your assembly drawing.

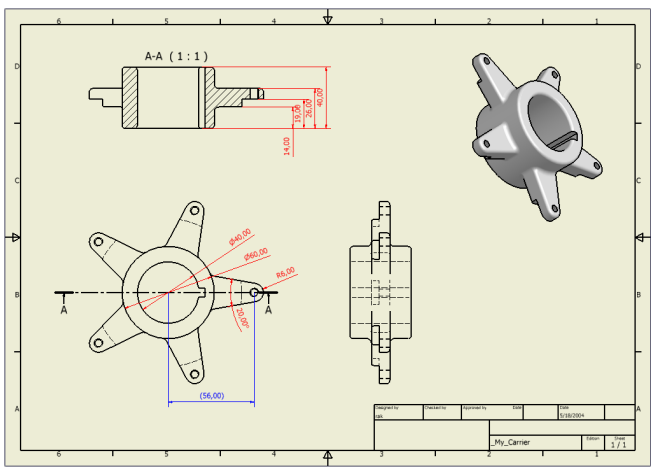

To review the updated rear axle assembly drawing:

1. From the File menu, choose **_Rear_Axle_Drawing.idw** from the list of recently used files.

   The drawing now shows the modified status of the rear axle assembly. Notice the drawing views have updated to show the new instance and version of the carrier.

   Also, notice the parts list has updated to reflect the appropriate quantity of carriers and fasteners.

2. **Save** the updated assembly drawing and **Close** the file.

3. Finally, **Close** the *Rear Axle Assy.iam* assembly file.

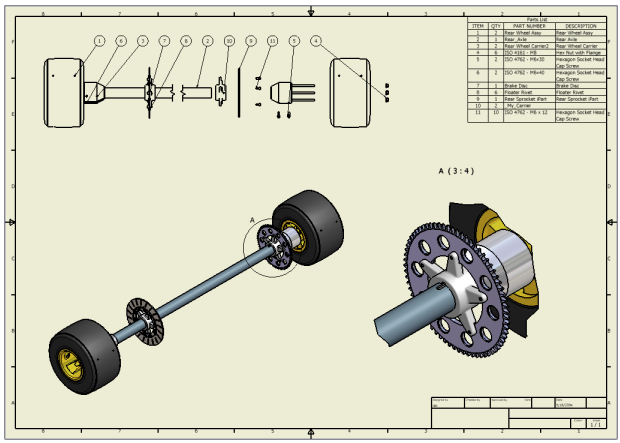

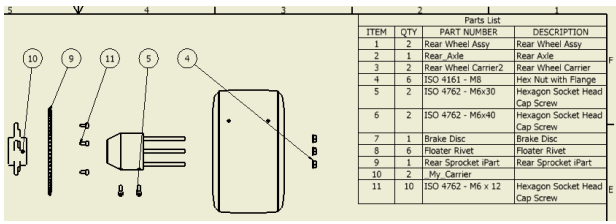

Parts List

ITEM	QTY	PART NUMBER	DESCRIPTION
1	2	Rear Wheel Assy	Rear Wheel Assy
2	1	Rear_Axle	Rear Axle
3	2	Rear Wheel Carrier2	Rear Wheel Carrier
4	6	ISO 4161 - M8	Hex Nut with Flange
5	2	ISO 4762 - M6x30	Hexagon Socket Head Cap Screw
6	2	ISO 4762 - M6x40	Hexagon Socket Head Cap Screw
7	1	Brake Disc	Brake Disc
8	6	Floater Rivet	Floater Rivet
9	1	Rear Sprocket iPart	Rear Sprocket iPart
10	2	_My_Carrier	
11	10	ISO 4762 - M6 x 12	Hexagon Socket Head Cap Screw

Reusing Your Existing 2D Design Data

If you are interested in seeing how you can import an existing 2D AutoCAD drawing into Autodesk Inventor and then convert the 2D design data to a 3D part, continue with this section. If you would rather skip this section, continue to the next section "Designing Welded Assemblies," where you create a welded assembly of the steering column.

Designers have been using CAD systems for many years, which adds up to a great deal of existing drawings. Autodesk Inventor software makes digital data reuse fast and simple, providing you with the best possible workflow for maximizing the value of AutoCAD data.

Next, you create a 3D bearing housing for the rear axle using a 2D AutoCAD drawing. The 2D AutoCAD drawing and finished 3D bearing housing are shown on the right.

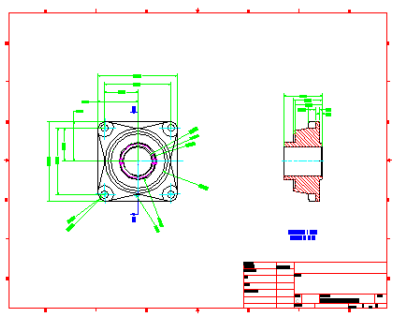

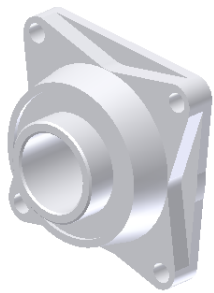

Rather than creating the part from scratch, you can reuse the AutoCAD drawing geometry to quickly build the 3D part.

Creating a New Component

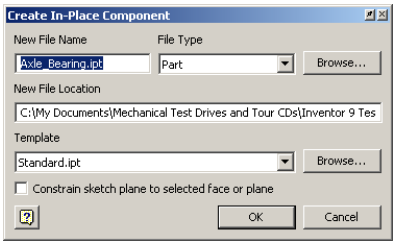

First, you turn off the visibility of all parts in the assembly except the chassis frame. Using the Isolate tool, you can quickly focus on just the assembly components you need for the task at hand.

1. In the graphics window, select the chassis frame, and then **right-click** and choose **Isolate**.

2. Use the **Zoom Window** tool to zoom in on the mounting plate on the right side of the chassis frame.

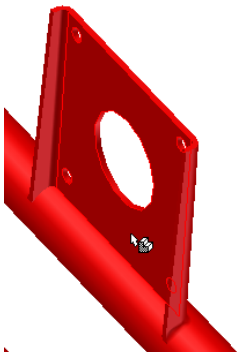

Next, you create a new component in the context of the assembly.

1. On the Panel bar, click the **Create Component** tool.

2. In the Create In-Place Component dialog box, type ***_My_Bearing.ipt*** as the new file name.

3. Clear the **Constrain sketch plane to selected face or plane** check box and then click **OK**.

4. To identify the location for the sketch plane, select the inner planar face of the plate on the right side of the chassis frame, as shown in the image to the right.

Opening a Drawing File

Next, you import a 2D AutoCAD drawing and selectively identify geometry to use as sketch geometry for a feature.

1. On the Panel bar, click the **Insert AutoCAD File** tool.

2. In the Open dialog box, select ***Axle_Bearing.dwg*** and then click **Open**.

The Layers and Objects Import Options dialog box is displayed.

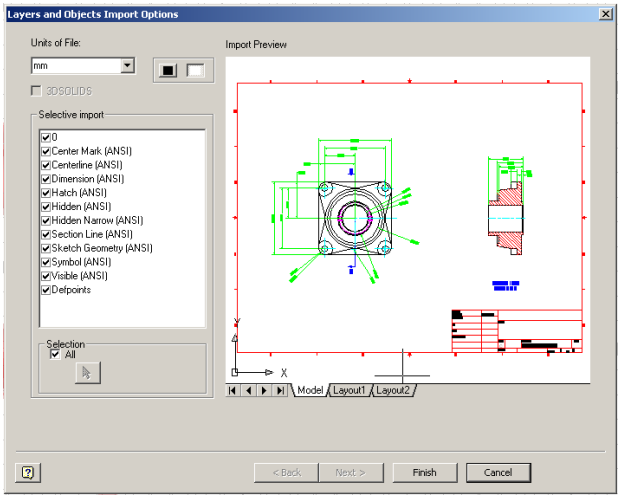

Selecting the Objects to Import

Now you can identify which layers or geometry you want to import. The left side of the dialog box displays the layers that exist in the drawing file. Even though you can import the entire drawing, you may want to import only the contents you need.

1. In the Layers and Objects Import Options dialog box, ensure the Units of File is set to **mm**.

2. Click the **white box** button to the right of the units to set the background color to white.

3. In the Selective import area, clear the check boxes for all layers between Hatch and Symbol.

   Tip: You can use the Shift key to select all items between these two layers and then click the check box once to clear all the check boxes.

   Notice as you select or deselect the layers, that the preview window dynamically updates.

4. In the Selection area, clear the **All** check box.

   This enables you to select geometry in the Import Preview window.

5. In the Import Preview window, drag a rectangle around all the geometry in the view on the right.

   This selects all the geometry in the right view.

6. Use the wheel mouse to pan and zoom into the front view on the left.

7. In the Import Preview window, select the outer square profile of the part (arrow 1), the triangular edges (arrow 2), the four small holes in each corner, and the smallest circle at the center of the part.

   Tip: If you select the wrong geometry, press and hold the Shift key and reselect the geometry to remove it from the selection list.

8. Click **Finish**.

The geometry you identified is imported as sketch geometry for your part.

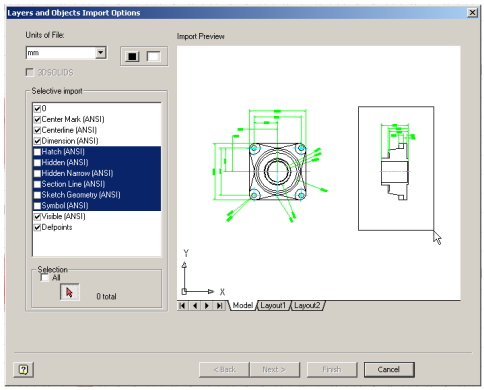

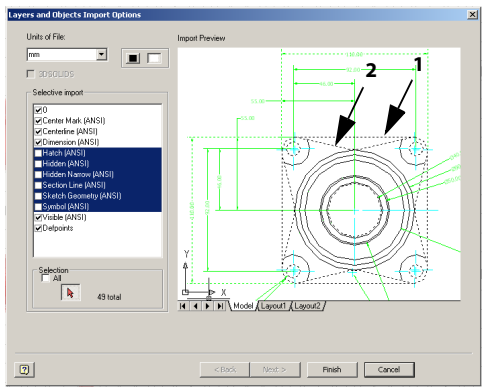

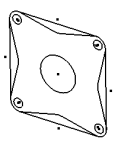

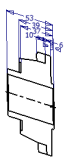

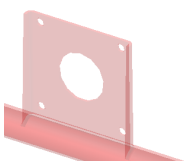

Using the Imported Geometry to Create Features

Next, you use the imported geometry to create the base of the bearing housing. The base can be created using two extrusion features.

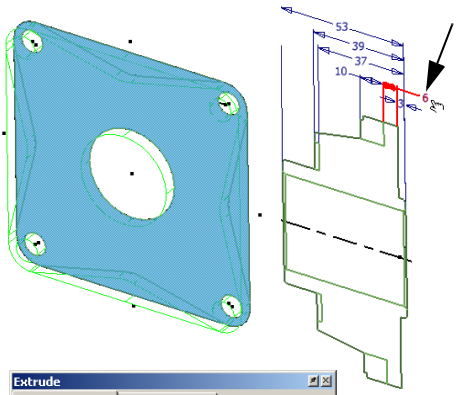

1. In the graphics window, **right-click** and choose **Finish Sketch**.

2. Use the **Zoom Window** tool to zoom in on the sketch geometry.

3. On the Panel bar, click the **Extrude** tool.

4. To identify the profile to extrude, select just outside the large center circle and then select the four triangular shapes near each edge.

5. In the Extrude dialog box, highlight the distance value, then select the 6 dimension as shown in the image to the right.

   Autodesk Inventor even enables you to reuse the imported dimensions as parametric references.

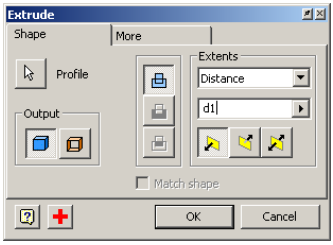

6. Click **OK** to create the first extrusion feature.

Sharing a Sketch

To finish the base of the bearing housing, you can create another extrusion by reusing the imported sketch geometry.

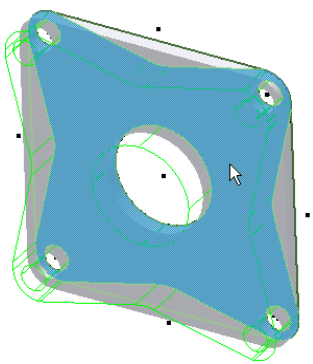

1. Near the bottom of the Browser, click the **plus (+) sign** next to **Extrusion1**.

2. **Right-click** on **Sketch1** and choose **Share Sketch**.

   The imported sketch geometry is displayed in the graphics window.

To create the second extrusion feature for the base:

1. On the Panel bar, click the **Extrude** tool.

2. To define the profile to extrude, in the graphics window, select the area just outside the center hole on the base.

   Notice that you can select sketch geometry through the 3D part geometry.

3. In the Extrusion dialog box, place the cursor to the right of the existing parameter name d1 (your parameter name may be different) and then type **+** to place a plus (+) sign after the parameter d1.

4. In the graphics window, select the 10 dimension.

   The extents value should now show **d1+d11** (your parameter names may be different).

5. Click **OK** to create the second extrusion defining the shape of the base.

6. In the Browser, **right-click** on **Sketch1** (just above the Extrusion1 feature), and then choose **Visibility** to turn off the visibility of the shared sketch.

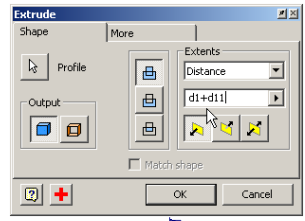

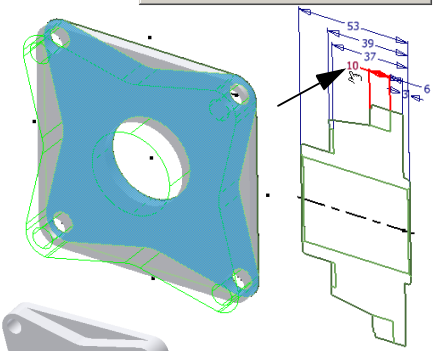

Creating a Work Plane

Next, you create a work plane at the center of the part that will be used to orient the sketch for the revolution feature.

1. On the Panel bar, click the **Work Plane** tool.

2. In the graphics window, **right-click** and choose **Create Axis**, and then select the face of the large hole at the center of the part.

3. Select the right planar face of the part.

4. In the Angle dialog box, type **0** (zero) and press **Enter**.

   A work plane is created parallel with the side face and centered in the hole. In the Browser, notice the work axis is nested under the work plane.

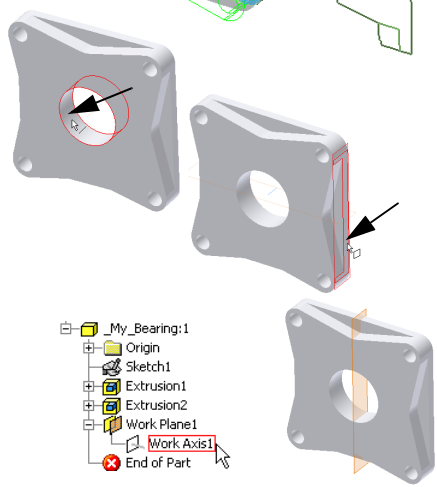

Creating Another Sketch

Next, you create a new sketch for the final revolution feature.

1. In the graphics window, **right-click** on the new work plane you just created and choose **New Sketch**.

2. Press the **F7** key to slice the graphics.

3. On the Standard toolbar, click the **Look At** tool and then select the work plane.

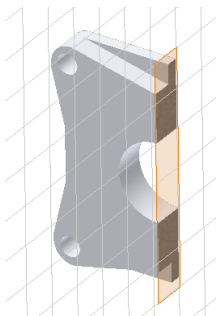

Creating Reference Geometry

Next, you project the right edge of the part and then create a point that is later used to orient the imported sketch geometry for the revolution feature.

1. On the Panel bar, click the **Project Geometry** tool and then select the right vertical edge of the part.
2. **Right-click** and choose **Done**.
3. On the Panel bar, click the **Point, Hole Center** tool.
4. Move the cursor near the center of the projected line, and when a green dot is displayed on the line, click to place the point, and then **right-click** and choose **Done**.

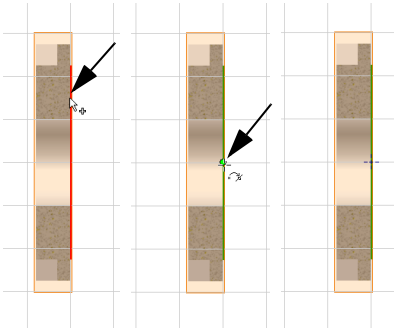

Importing More 2D Drawing Geometry

Next, you selectively import the 2D AutoCAD geometry for the revolution feature.

1. On the Panel bar, click the **Insert AutoCAD File** tool.
2. In the Open dialog box, select ***Axle_Bearing.dwg*** and then click **Open**.

   The Layers and Objects Import Options dialog box is displayed.
3. In the Layers and Objects Import Options dialog box, ensure the Units of File is set to **mm**.
4. Click the **white box** button to the right of the units to set the background color to white.
5. In the Selective import area, clear the check boxes for all layers between Hatch and Symbol.
6. In the Selection area, clear the **All** check box.
7. In the Import Preview window, drag a rectangle around all the geometry in the view on the right.
8. Click **Finish**.

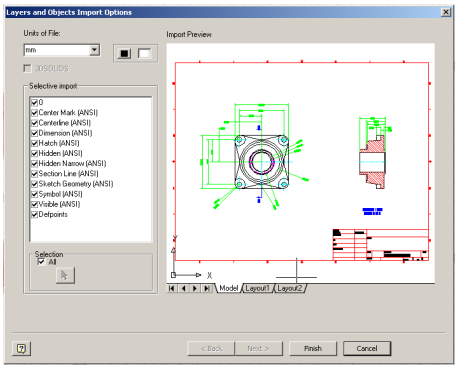

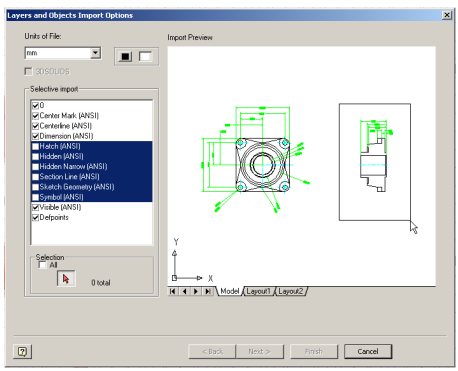

The geometry you identified is imported as sketch geometry for your next feature.

Rotating and Aligning the Geometry

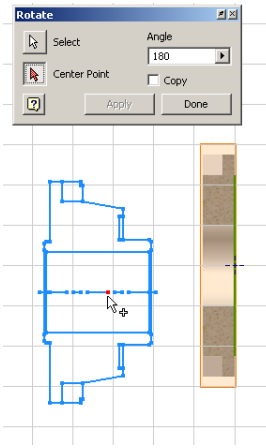

Next, you rotate and align the sketch geometry with the reference geometry on the 3D part.

1. In the graphics window, drag a rectangle around the geometry you just imported.

2. With the geometry highlighted, drag the geometry closer to the left side of the part as shown in the image to the right (the placement location is only approximate).

3. On the Panel bar, click the **Rotate** tool.

4. Since the geometry is already selected, in the Rotate dialog box, click **Center Point** and then select any point along the centerline of the sketch geometry.

5. In the Rotate dialog box, enter an Angle value of **180**.

6. Click **Apply** to rotate the geometry, and then click **Done** to close the Rotate dialog box.

The imported sketch geometry is rotated 180 degrees.

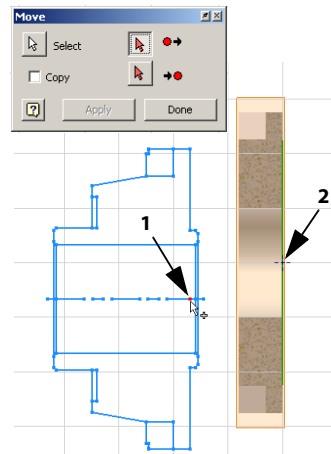

To align the geometry:

1. On the Panel bar, click the **Move** tool.

   The geometry to move is already selected.

2. In the Move dialog box, click **Move From** and then select the point shown in the image to the right (arrow 1).

   In the Move dialog box, the Move To button is automatically selected after you identify the Move From location.

3. To identify the location to move to, select the Point, Hole Center you placed on the right edge of the part (arrow 2).

4. Click **Apply** to move the geometry, and then click **Done** to close the Move dialog box.

The imported sketch geometry is now aligned at the proper location on the 3D part.

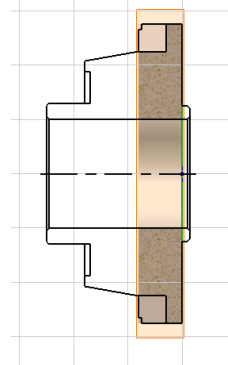

Creating the Revolution Feature

To finish the design of the bearing housing, you create a revolution feature.

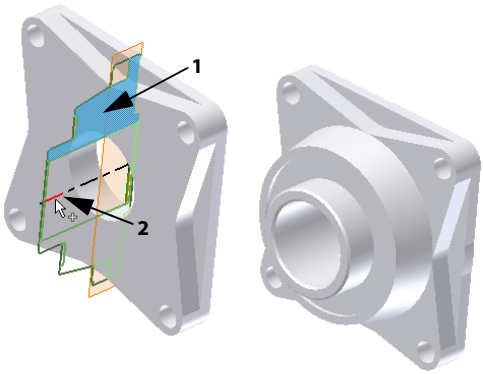

1. Use the **Zoom** and **Rotate** tools to rotate your view of the part, similar to the view shown on the right.
2. On the Standard toolbar, click the **Return** tool to finish the sketch.
3. On the Panel bar, click the **Revolve** tool.
4. Select the profile shown on the right (arrow 1).
5. In the Revolution dialog box, click **Axis**, select any of the line segments along the centerline of the sketch geometry (arrow 2), and then click **OK** to create the Revolution feature.

To finish the design of your bearing housing and save your work:

1. To turn off the visibility of the work plane, in the Browser, **right-click** on **Work Plane1** and choose **Visibility**.
2. On the Standard toolbar, click the **Save** tool.

Constraining the Bearing Housing

Next, you return to the main assembly, and constrain the bearing housing to the mounting plate on the chassis frame.

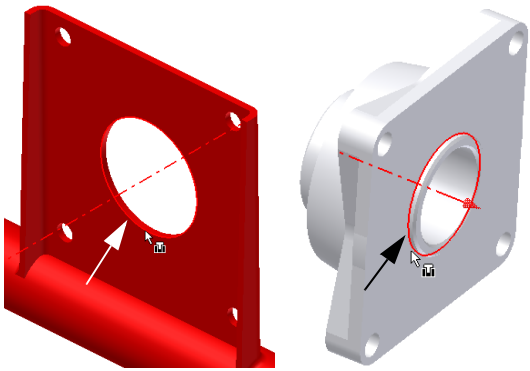

1. On the Standard toolbar, click the **Return** tool to return to the main assembly.
2. To use the shortcut key for the Constraint tool, press **C**.
3. In the Place Constraint dialog box, click the **Insert** option.
4. On the mounting plate of the chassis frame, select the inner edge of the center hole, as shown on the right.
5. Use the **Rotate** tool to view the opposite side of the bearing housing.
6. Select the circular edge of the bearing housing shown on the right.

7. Click **OK** to create the constraint.

8. Press the **F5** key a few times to restore your previous view.

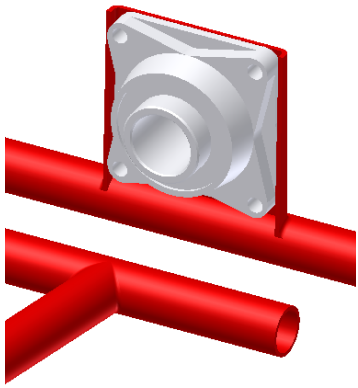

Mirroring the Bearing Housing

Next, you mirror the bearing housing to the opposite side of the chassis frame.

1. In the graphics window, **right-click** and choose **Undo Isolate** to restore the visibility of the parts that were visible prior to isolating the chassis frame.

2. Press the **F6** key to display the isometric view.

3. On the Panel bar, click the **Mirror Components** tool.

4. To identify the parts to mirror, select the bearing housing.

5. In the Mirror Components dialog box, click **Mirror Plane**.

6. In the Browser, select **Work Plane7** (just above _My_Bearing:1).

   A preview of the mirrored part is displayed.

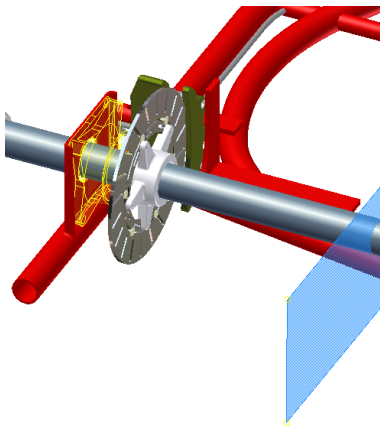

7. In the Mirror Components dialog box, click the green icon to the left of _My_Bearing:1. The green mirror icon changes to a yellow plus (+) icon .

   Tip: The yellow plus (+) icon signifies that another instance of the part will be placed rather than actually mirroring the part. Since there is no physical difference between the left and right versions, you can simply place another instance.

8. Click **OK**.

9. In the Mirror Components: File Names dialog box, simply click **OK**.

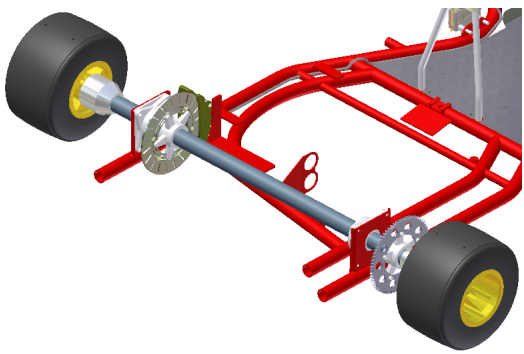

Congratulations, you have just completed the design of the rear axle!

Before you continue to the next section, save your work:

- On the Standard toolbar, click **Save** to save the *_Start_Go_Cart.iam* assembly file.

Designing Welded Assemblies

If you are interested in seeing how you can create welded assemblies using Autodesk Inventor, continue with this section. If you would rather skip this section, continue to the next section "Creating a Sheet Metal Design," where you create a sheet metal bracket and the associated flat pattern.

Autodesk Inventor software offers a built-in environment for the design of weldments and machined castings. Modeling welds in 3D improves quality by simulating weld preparation, welding, and post-weld operations. Next, you open an existing assembly with all parts designed to their nominal size and then weld the parts together. After the welded assembly is complete, you create a drawing that includes the weld seams.

Welding the Flanges on the Steering Column



In our go–cart design, you weld the parts defining the steering column. First, you start by opening the steering column assembly.

1. Use the **Zoom** tool to zoom in on the steering column.
2. In the graphics window, **right-click** the steering column assembly and then choose **Open**.

   The steering column assembly is opened in a separate window.

Notice in the Browser that the steering column assembly contains a steering column shaft and two steering column flanges.

Converting the Assembly to a Welded Assembly

To create welds between the parts in the assembly, you must convert the assembly to a welded assembly.

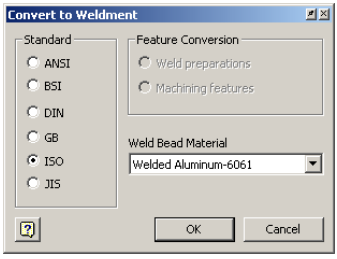

1. From the Applications menu, choose **Weldment**.
2. When the dialog box is displayed asking you to confirm the conversion of the assembly to a welded assembly, click **Yes** to continue.
3. In the Convert to Weldment dialog box, ensure the Standard is set to **ISO** and the Weld Bead Material is **Welded Aluminum-6061**, and then click **OK**.

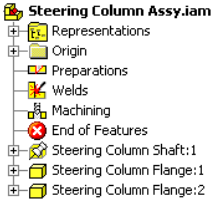

Notice in the Browser that the assembly now has Preparations, Welds, and Machining entries. Each of these entries contains the individual features associated with that specific process.

Creating a 3D Fillet Weld

Autodesk Inventor can create cosmetic welds and 3D fillet welds. Next, you create 3D fillet welds between the two flanges and the steering column. Since our weldment is fairly simple and requires no preparations, you can go directly to the welding process.

1. In the Browser, **double-click** on **Welds**.

   The Panel bar now displays the appropriate welding tools.

2. On the Panel bar, click the **Weld** tool.

3. In the Weld Feature dialog box, click the **Fillet Weld** type.

4. With the **Arrow Side 1** button selected, select the steering column shaft.

5. Click the **Arrow Side 2** button, and then select the top face of the upper flange.

6. Click the **Arrow Side** tab and then type **4 mm** for the depth.

7. Click the **General** tab, and then click **Apply**.

   The 3D fillet weld seam is created along the intersection of the two parts. Also notice that the weld symbol is also displayed.

8. Use the **F4** key to rotate your view so you can see the bottom of the lower flange.

9. With the **Arrow Side 1** button selected, select the steering column shaft.

10. Click the **Arrow Side 2** button, select the bottom face of the lower flange, and then click **OK** to create the second fillet weld.

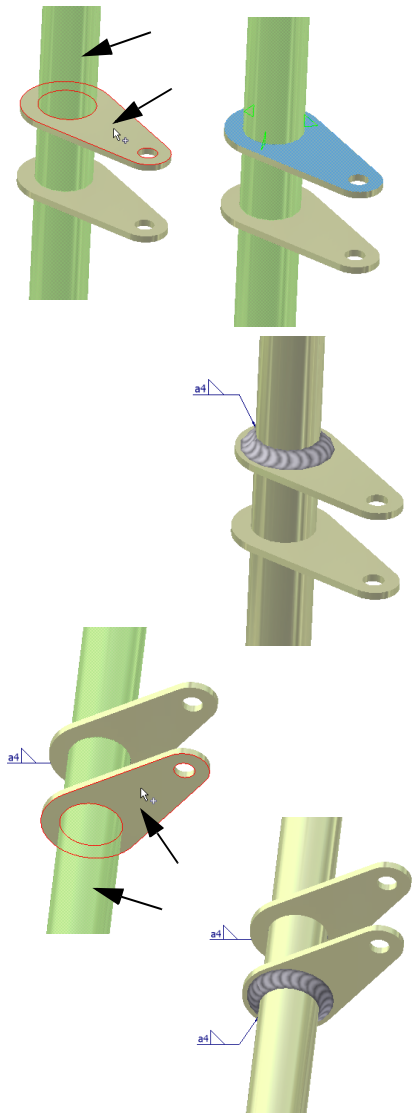

The final weld seam and associated weld symbol are created.

To finish your welded assembly:

- On the Standard toolbar, click **Return** and then click **Save**.

Creating a Drawing of the Welded Assembly

Next, you create a drawing of the welded assembly.

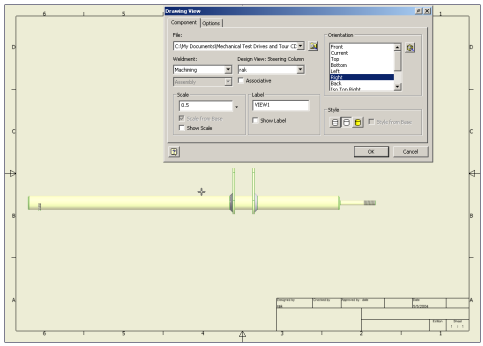

1. On the Standard toolbar, click the **New** tool.
2. In the Open dialog box, **double-click** the **Standard.idw** icon.

   A new A3 size drawing sheet with a frame and title block is created.
3. On the Panel bar, click the **Base View** tool.
4. In the Drawing View dialog box, click the File drop–down list and then choose ***Steering Column Assy.iam***.
5. In the Drawing View dialog box, under Orientation select **Right**, change the scale to **0.5** (shown as **1:2** in the drop–down list), and ensure Style is set to **Hidden Line Removed** .
6. To place the drawing view on the sheet, click the approximate location shown in the image shown above.

To create a projected view:

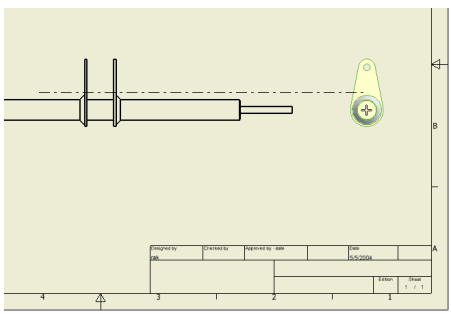

1. On the Panel bar, click the **Projected View** tool.
2. Select the view you just created, and then click to the right to define the location of the side view.
3. To create the drawing view, **right-click** and then choose **Create**.

Reusing Welding Symbols and Annotations

Since the welding symbols already exist in the model, you can simply retrieve them for the drawing.

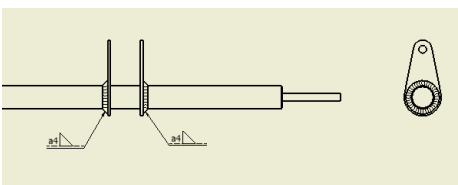

1. **Right-click** in the drawing view on the left, choose **Get Model Annotations**, and then choose **Get Welding Symbols**.
2. If the welding symbols are not located as shown on the right, simply drag them into the desired position.
3. To get the welding annotations for both views, **right-click** in each view, choose **Get Model Annotations**, and then choose **Get Welding Annotations**.

Finishing the Welded Drawing with Dimensions

To finish your drawing of the welded assembly, you can add some baseline dimensions showing the proper location of each flange.

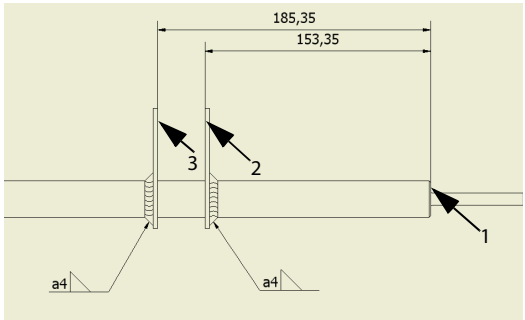

- Click the title bar (or right-click the background) on the Panel bar and choose **Drawing Annotation Panel**.

To add baseline dimensions to the view:

1. Zoom in on the flanges and the right end of the shaft in the left drawing view.
2. On the Panel bar, click the **Baseline Dimension Set** tool.
3. In the left view, select the three vertical lines from right to left, as shown in the image above.
4. **Right-click** and choose **Continue**.
5. Click above the view to place the baseline dimensions.
6. **Right-click** and choose **Done** to quit the Baseline Dimension Set tool.

Saving Your Welded Assembly Drawing

To save your weldment drawing of the steering column:

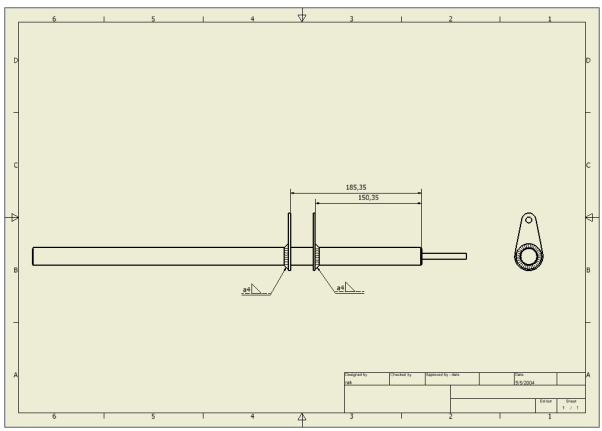

1. On the Standard toolbar, click the **Save** tool.
2. In the Save As dialog box, type ***_My_Weldment.idw*** as the file name and then click **Save**.
3. Close the *_My_Weldment.idw* drawing window and then close the *Steering Column Assy.iam* window.

Testing the Steering Mechanism

Back in the go–cart assembly, notice that your previous steering column assembly has automatically been replaced with the welded steering column. You can see the weld beads on the flanges and the 3D weld symbols.

Autodesk Inventor software also allows you to interactively test and simulate your designs early in the design cycle, enabling you to deliver a better finished product.

To test the steering mechanism:

- In the graphics window, drag the steering wheel in a clockwise and then counter-clockwise direction.

As you rotate the steering wheel:

- The steering column rotates and moves the tie rods
- The tie rods move the spindles
- The spindles turn the wheels

Tip: You can also simulate the brake mechanism by moving the brake pedal on the left side of the vehicle.

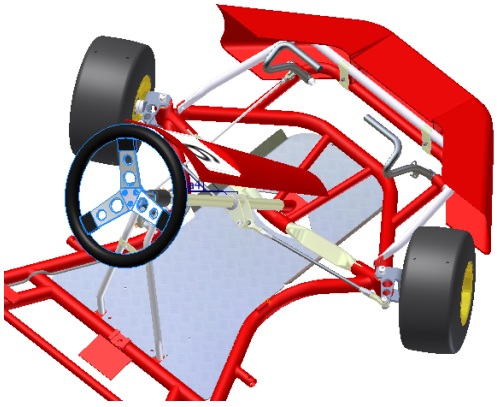

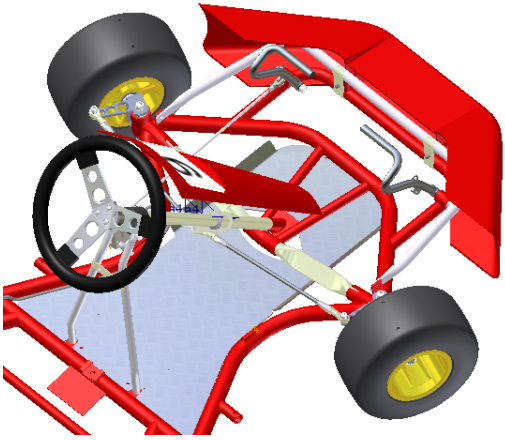

Creating a Sheet Metal Design

This is the final hands-on portion of the test drive. If you are interested in seeing how you can create a sheet metal bracket and the associated flat pattern, continue with this section. If you would rather skip this section, continue to the next section of the test drive where you can learn more about additional Autodesk manufacturing solutions.

Autodesk Inventor software includes a set of powerful sheet metal tools, enabling you to create parts face by face, flange by flange, or by extruding special contours. Sheet metal designs need to take into consideration a constant thickness, bend radii, relief sizes, and so forth. Autodesk Inventor enables you to easily manage all these sheet metal variables, and much more.

Creating a Sheet Metal Part

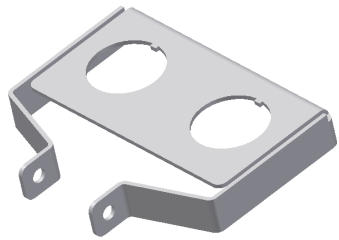

With Autodesk Inventor software, you can design a sheet metal part in several convenient ways. For the purposes of this test drive, you design a sheet metal part from a simple contour.

To start a new sheet metal part:

1. On the Standard toolbar, click the **New** tool.

2. **Double-click** the **Sheet Metal.ipt** icon to create a new sheet metal part.

Once again, you start your part with a sketch. Since you are now somewhat familiar with the following sketching tools, the descriptions are brief.

1. Use the **Zoom** tool and zoom out slightly.

2. Click the **Line** tool and then create the open, four-segment line shown on the right.

   Tip: Use the grid to sketch the line segments as closely as possible to the size shown on the right.

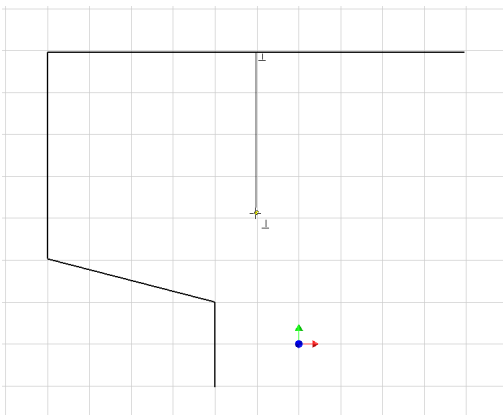

To create a vertical construction line at the center of the upper line segment:

1. Click the **Line** tool and then click the **Construction** tool.

2. Using the green dot at the midpoint of the upper horizontal line as a start point, sketch a construction line that is perpendicular to that line.

3. Click the **Construction** tool to turn construction mode off.

Mirroring Sketch Geometry

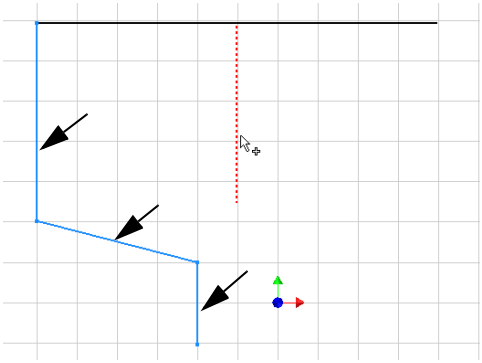

Next, you mirror three line segments from the left to the right side of the sketch using the construction line.

1. On the Panel bar, click the **Mirror** tool.
2. Drag a window (from left to right) around the three line segments on the left side of the sketch (see arrows).
3. In the Mirror dialog box, click **Mirror line.**
4. Select the construction line, click **Apply** and then click **Done**.

Adding Dimensions to the Contour

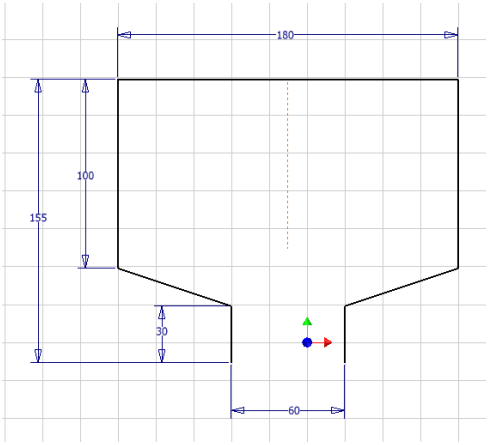

Next, you add dimensions to define the size of the contour.

1. Using the **General Dimension** tool, create the **60**, **180**, **155**, **100**, and **30** dimensions respectively.

   Note: As you add dimensions, notice that both sides of the sketch update.

   Tip: To create the 155 dimension, select the upper horizontal line and then select the endpoint of the lower–left line segment.
2. Press **F6** to restore the isometric view.
3. In the graphics window, **right-click** and choose **Finish Sketch**.

Defining the Sheet Metal Thickness

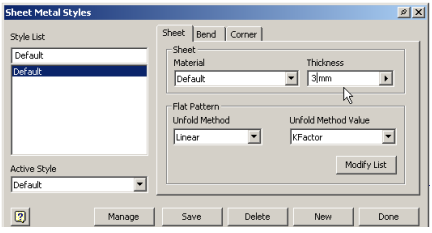

The default thickness of the sheet metal part is a bit thin. With Autodesk Inventor software, you can easily change the sheet metal thickness and other crucial parameters globally.

1. On the Panel bar, click the **Sheet Metal Styles** tool.
2. In the Sheet Metal Styles dialog box, type **3 mm** for the thickness, click **Save**, and then click **Done**.

Your default settings have now been changed.

Creating the Sheet Metal Part from the Sketch

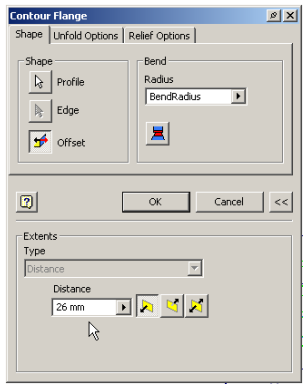

1. On the Panel bar, click the **Contour Flange** tool.
2. Select the open contour as the profile.
3. In the Contour Flange dialog box, type a distance of **26 mm**.
4. If the preview of the part is not offset to the outside of the sketch, click the **Offset** button.
5. Click **OK** to create the sheet metal part.

Creating a Flange

Next, you create a flange that supports the RPM and speedometer gauges.

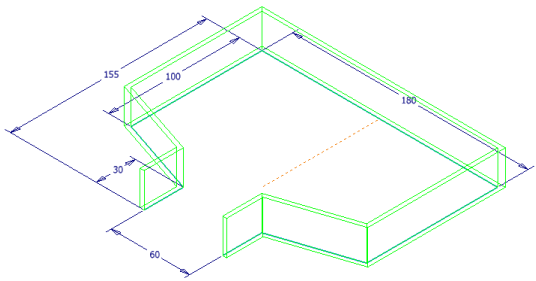

1. On the Panel bar, click the **Flange** tool.
2. Select the long, inner edge of the part shown in the image to the right.
3. In the Flange dialog box, type a distance of **100 mm**.
4. If your preview does not match the image shown on the right, use the **Flip Offset** and **Flip Direction** options to adjust your settings.
5. Click **OK** to create the flange.

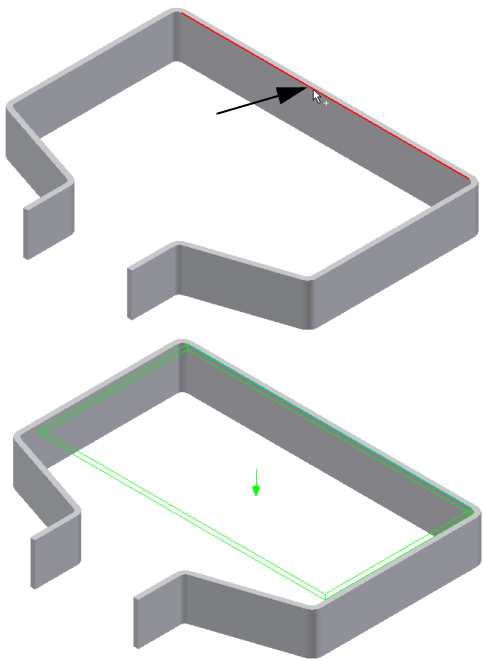

Creating a Hole in the Part

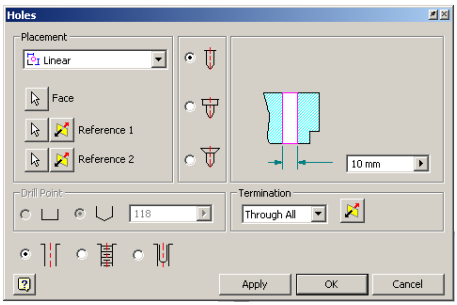

Next, you create a hole through the short tabs of the part.

1. On the Panel bar, click the **Hole** tool.
2. Ensure the **Linear** placement option is selected.
3. To define the face, in the graphics window, select the outer face of the right tab.
4. To define the first edge and offset, select the upper edge of the tab, type a distance of **13**, and then press **Enter**.
5. To define the second edge and offset, select the left edge of the tab, type a distance of **13**, and then press **Enter**.
6. In the Holes dialog box, choose a termination of **Through All**.
7. To define the size of the hole, type a value of **10 mm** and then click **OK** to create the hole.

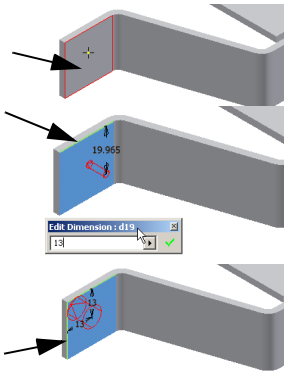

Defining the Location of the Cutouts for the Gauges

Next, you sketch two points that define the location of the cutouts for the gauges.

1. On the Standard toolbar, click the **2D Sketch** tool and then select the top face of the flange.
2. Use the **Look At** tool to view the top face of the flange.
3. Using the **Line** and **Construction** tools, create a vertical construction line that is centered on the midpoint of the upper edge of the sketch, as shown on the right (arrow 1).
4. On the Panel bar, click the **Point, Hole Center** tool, and then place one point at the approximate location shown in the image to the upper right (see arrow 2).
5. Use the **Mirror** tool again to mirror the Point, Hole Center to the right side of the sketch using the construction line as the mirror line.
6. In the graphics window, **right-click** and choose **Finish Sketch**.

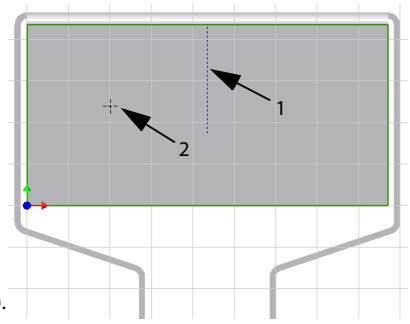

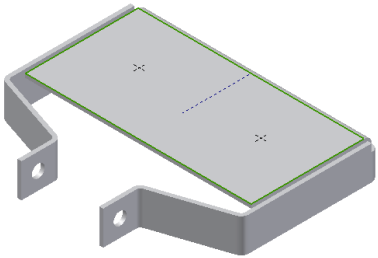

Using the Punch Tool

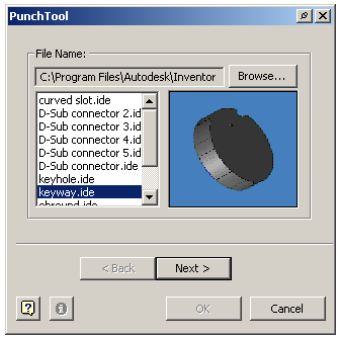

Next, you use the punch tool to create the cutouts for the gauges.

1. On the Panel bar, click the **Punch Tool** tool.
2. In the Punch Tool dialog box, choose **Keyway.ide** and then click **Next**.
3. Since the geometry for the location of the punch is automatically selected using the points on the sketch, click **Next** again.

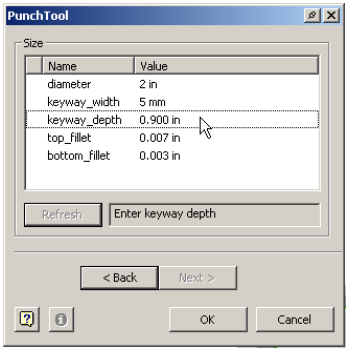

To define the size of the keyway:

1. For the diameter, highlight the current value and then type **2 in**.

   Tip: Autodesk Inventor software enables you to mix units of measurement.
2. For the keyway width, highlight the current value and then type **5 mm**.
3. For the keyway depth, highlight the current value and then type **.9 in**.
4. Click **OK** to create the two cutouts for the gauges.

Finishing the Design Using Corner Rounds

Finally, you use the corner round tool to remove some sharp edges on the part.

1. On the Panel bar, click the **Corner Round** tool.
2. Select the six edges of the part shown on the right (the sharp corners of the short tabs and the flange) and then click **OK** to create the corner rounds.

   Note: Notice how Autodesk Inventor automates the selection process of these short edges.

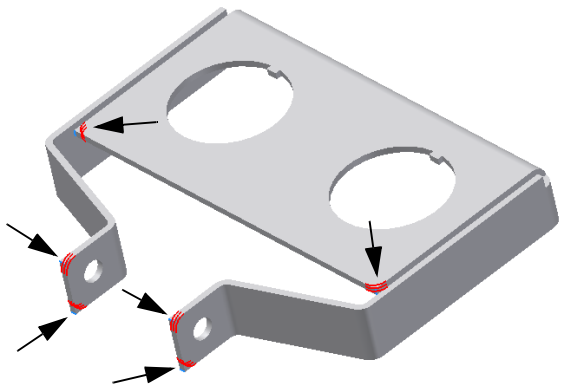

3. To save your sheet metal part, click the **Save** tool, type the name ***_My_Bracket.ipt***, and then click **Save**.
4. Close *_My_Bracket.ipt* window.

Placing the Bracket into the Assembly

Before, you place your sheet metal bracket into the assembly, let's isolate some parts to simplify the process.

1. In the Browser, scroll to the top of the component list.
2. Using the Ctrl or Shift key, select the four parts shown in the image on the right.
3. **Right-click** and choose **Isolate**.

   The visibility of all other parts in the assembly is turned off.



To place your sheet metal bracket into the assembly:

1. On the Panel bar, click the **Place Component** tool.
2. In the Open dialog box, select ***_My_Bracket.ipt*** and then click **Open**.
3. Place one instance of the bracket as shown on the right.
4. In the graphics window, **right-click** and choose **Done**.



Constraining the Bracket

First, you constrain the rear of the bracket.

1. Use the **Zoom** tool to zoom in on the steering bushing.
2. On the Panel bar, click the **Constraint** tool and then click the **Insert** option.
3. Select the inner circular edge of the hole on the left tab of the bracket and then select the outer circular edge of the hole on the left support.
4. Click **OK** to create the constraint.

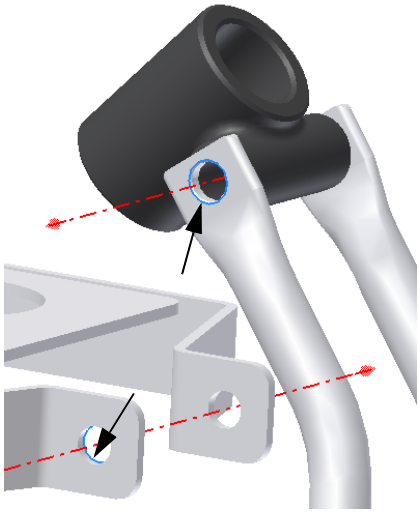

The rear of the bracket is now aligned. Next, you align the front face of the bracket with the panel.

1. Drag the front of the bracket to rotate the part into the position shown in the image to the right.

2. Click the **Constraint** tool again.

3. Select the front face of the bracket and then select the rear planar face of the nassau panel between the two holes, as shown in the image on the right.

4. Click **OK** to create the constraint.

The bracket rotates to align with the panel.

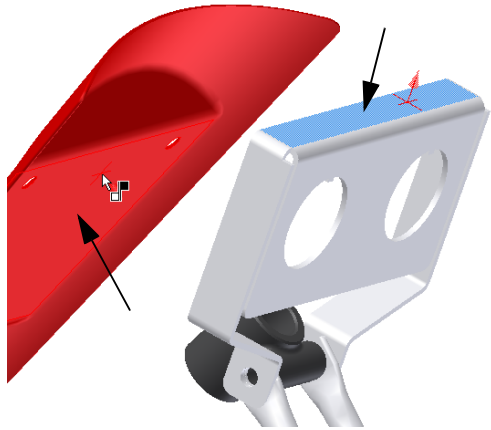

Finishing the Design of the Bracket

Next, you project the mounting holes from the front panel to the sheet metal bracket.

1. Use the **Rotate** tool so you can see the bottom of the sheet metal bracket.

2. To edit the design, in the graphics window, **double-click** the sheet metal bracket.

3. On the Standard toolbar, click the **2D Sketch** tool and then select the back face of the bracket shown in the image to the right.

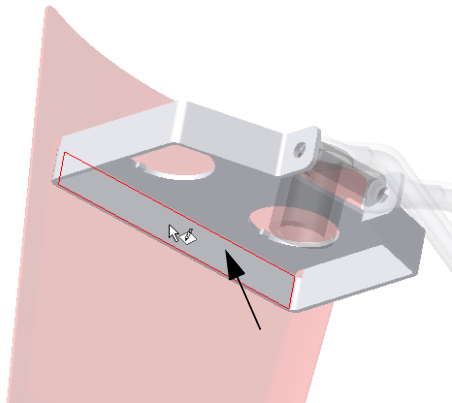

4. On the Panel bar, click the **Project Geometry** tool.

5. Move the cursor over the nassau panel near one of the holes. When the hole is highlighted, click to project the hole.

6. Repeat this process to project the other hole on the opposite side of the nassau panel, and then **right-click** and choose **Done**.

7. In the graphics window, **right-click** and choose **Finish Sketch**.

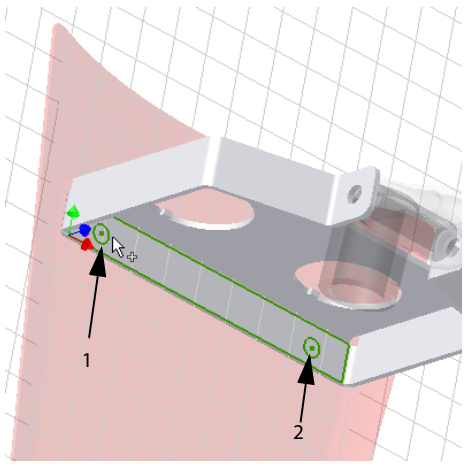

Next, you use the Cut tool to create the mounting holes in the front of the bracket.

1. On the Panel bar, click the **Cut** tool.
2. Carefully select the two circular edges you just projected (you may have to zoom in on the part).
3. With the two circular edges selected as the profiles, click **OK** to create holes in the bracket that align with the holes in the front panel.

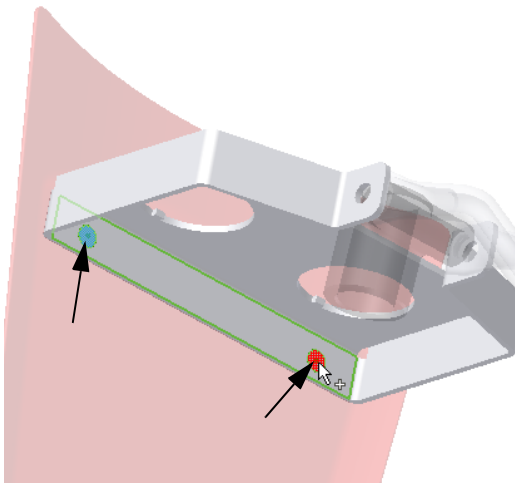

Creating a Flat Pattern

Before you finish editing, you should see how easily you can create a flat pattern of your sheet metal part. Flat patterns are basically the "flat blanks" used to manufacture sheet metal parts.

To create a flat pattern for your sheet metal part:

- On the Panel bar, click the **Flat Pattern** tool.

Autodesk Inventor automatically performs the required calculations for the bending allowance and correctly displays the flat pattern as a flat 3D part.

To identify the bending lines and bending zones on the flat blank:

- On the Standard toolbar, click the **down arrow** next to Shaded Display and then click the **Hidden Edge Display** tool.

If you want, you can create engineering drawings using both the folded and unfolded versions of the sheet metal part on the same drawing sheet. Flat patterns can also be exported as AutoCAD® DWG or DXF™ files and can then be imported into CAM (Computer Aided Machining) software for nesting, punching, or even laser cutting.

Saving Your Modifications to the Bracket

Now that you have finished the sheet metal design, you can save your work.



1. To save your sheet metal design, click the **Save** tool.
2. On the Standard toolbar, click the **Return** tool.
3. In the graphics window, right-click and choose **Undo Isolate**.

Saving Your Work

Now that you have completed your go-cart design, you can save your work.

1. On the Standard toolbar, click the **Zoom All** tool.
2. On the Standard toolbar, click the **Save** tool.

This completes the hands-on portion of the test drive.

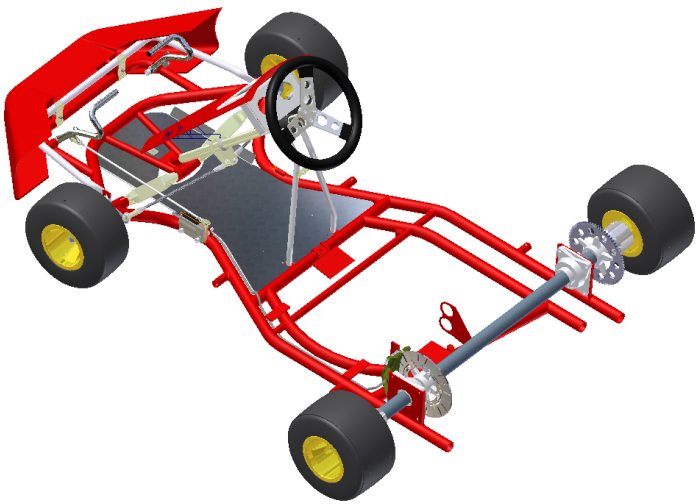

Autodesk Manufacturing Solutions

Autodesk offers a complete solution for manufacturers, including the most innovative 2D and 3D design tools and the only practical data management solution on the market. Working with Autodesk software, you'll use design data to accelerate product development cycles, collaborate more efficiently with manufacturing partners, and, in the end, get better-quality products to market faster.

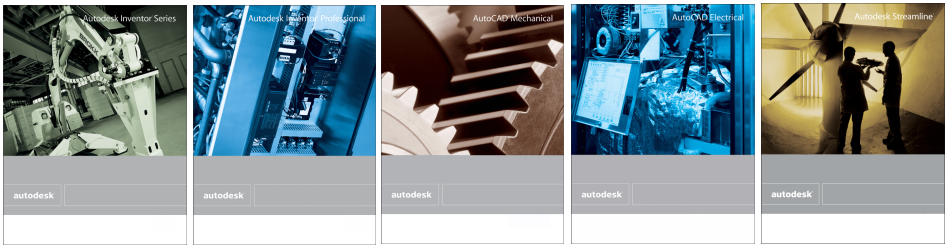

In the following sections, you will learn more about Autodesk's innovative design and data management tools. To access product information, view demonstrations, and learn how existing customers have been successful using Autodesk manufacturing solutions, visit our website using the links on the Autodesk Manufacturing Solutions screen of the Autodesk Inventor 9 Hands-on Test Drive CD.

To access these links:

1. Insert the Autodesk Inventor 9 Hands-on Test Drive CD into your CD-ROM drive.

2. If the setup program does not start automatically, choose Run from the Start menu, type *D:\testdrv.exe* (where D is the CD-ROM drive), and then click **OK** or press **Enter**.

3. On the main page of the install, click the **Autodesk Manufacturing Solutions** tab.

Autodesk Inventor Series

Autodesk Inventor® Series didn't become the world's best-selling 3D mechanical design software by accident. It became the industry leader because it consistently delivers the right tool for the job. Allowing you to design your entire product line with products from a single manufacturer, Autodesk Inventor Series is a manufacturing solution that includes:



- **Autodesk Inventor®**—the perfect tool to design 3D parts and assemblies
- **AutoCAD® Mechanical** for productive 2D drawing, documenting Autodesk Inventor files, and protecting your investment in AutoCAD® DWG files
- **Autodesk® Vault** to synchronize your design efforts



Because all of these applications are integrated into one complete package, Autodesk Inventor Series delivers a risk-free path from 2D to 3D. Now, you can move to 3D at your own pace, protecting your existing investments in 2D drawings and knowledge, and know that you're working with the most compatible platform on the market.

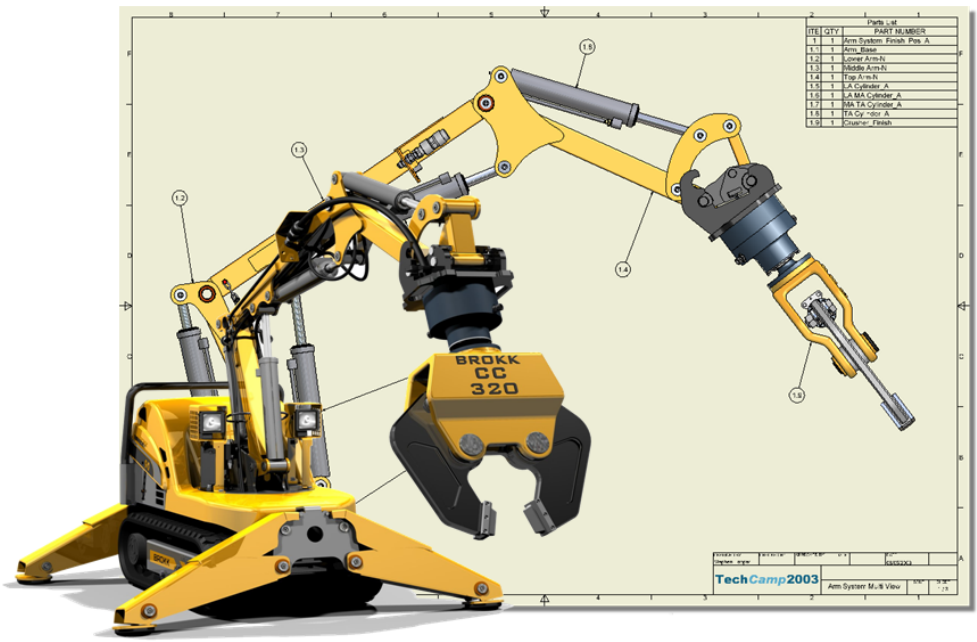

Autodesk Inventor Professional

Autodesk Inventor® Professional combines the proven power of Autodesk Inventor Series with a collection of highly specialized tools to design routed systems, validate parts, and import IDF files. In addition to the specialized functionality, this integrated application includes Autodesk Inventor® Series for 2D and 3D design, AutoCAD® Mechanical for 2D drafting and documentation, and Autodesk® Vault, an integrated data management tool for synchronizing design-related efforts across multiple teams.

With Autodesk Inventor Professional, you can quickly and easily



- Design virtual models of wiring, cables, and harnesses
- Create tubing, piping, and flexible hosing automatically
- Analyze part models for strengths and weaknesses
- Create printed circuit board geometry
- Communicate and manage design data

Now you can quickly develop a complete 3D model of your product, minimizing design errors and reducing costs. With a virtual 3D model, you can check that all parts, including tubing, piping, printed circuit boards, wire harnesses, and cables, fit together properly. All of this comes in one simple-to-deploy application that offers tremendous value at a reasonable price.

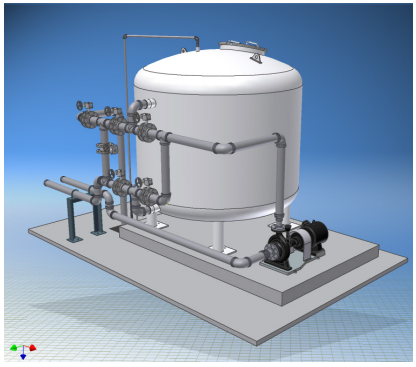

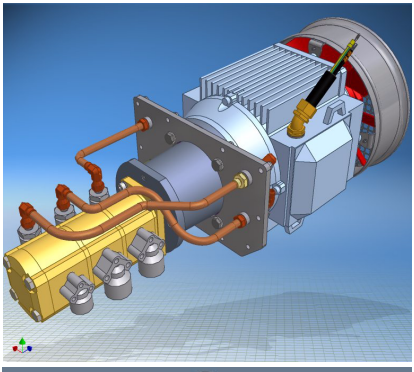

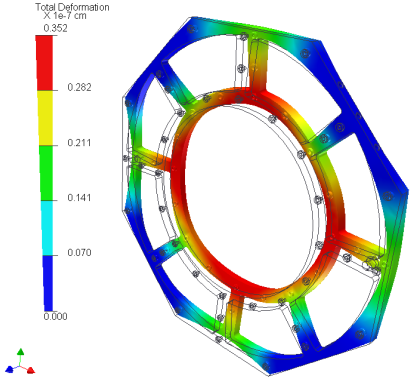

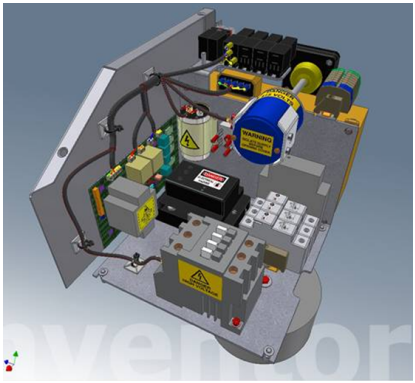

AutoCAD Mechanical

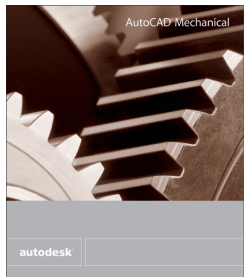

Want to get unparalleled productivity out of your 2D mechanical design process? Then take a look at AutoCAD® Mechanical.

Tailored to meet the challenges of mechanical designers, AutoCAD Mechanical packs powerful tools that accelerate mechanical design projects by automating common tasks. And it's based on the AutoCAD® platform, so it offers all of the DWG file compatibility your teams need to easily share design data with other AutoCAD and Autodesk Inventor® users. But it goes above and beyond the capabilities of AutoCAD, offering significant productivity increases for 2D mechanical design.

Design your products more efficiently with 2D mechanical structure. Use a more intuitive mechanical design environment where lines, arcs, and circles come together to form subassemblies and parts, exposing design intent and improving organization.

AutoCAD Mechanical is part of your complete manufacturing solution—and the tool you need to get the job done, done quickly, and done right.



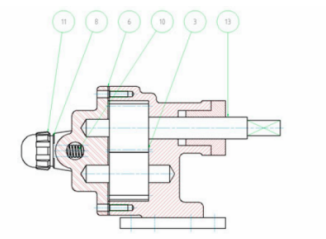

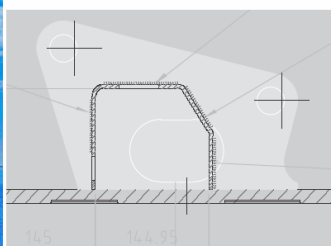

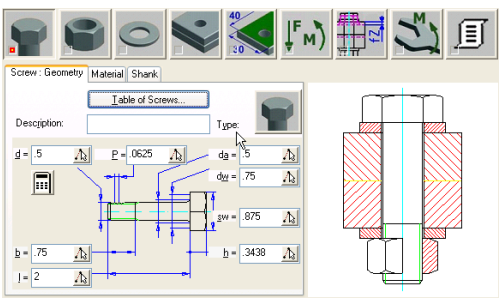

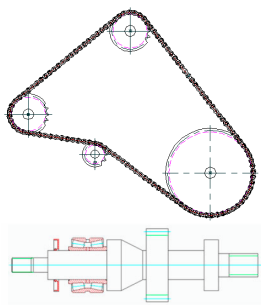



AutoCAD Electrical



If you design machines or products that move, electrical controls are probably a key component of your design requirements. Until now, design teams have had to rely on generic applications to manually lay out electrical schematics. Well, not anymore. Built on the AutoCAD® platform, AutoCAD® Electrical is the leading application built specifically for designing electrical control systems.

AutoCAD Electrical—a 2D design solution created for electrical control designers by electrical control designers—will help you design 2D industrial control systems faster and more accurately than ever before. With tools that automate key control system design tasks, your organization can slash the chances of error, accelerate production, and dramatically improve product quality. With benefits like these, this innovative product is the logical choice for electrical controls design.

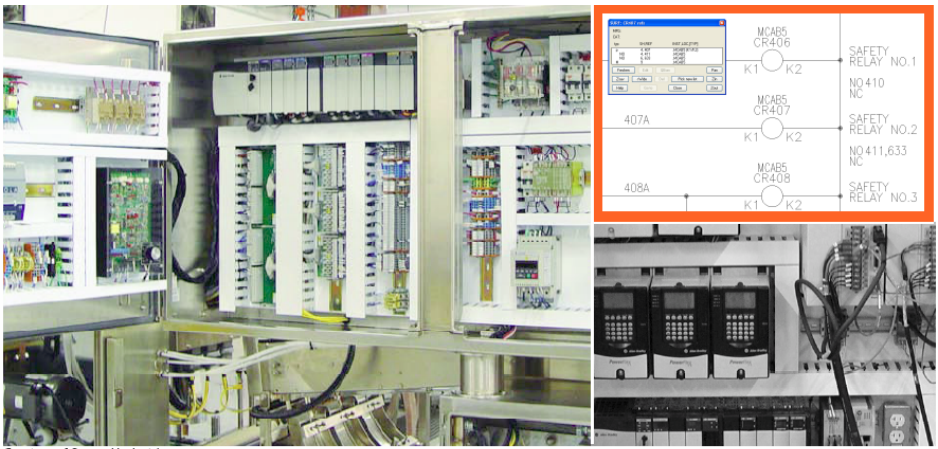

Courtesy of Osgood Industries

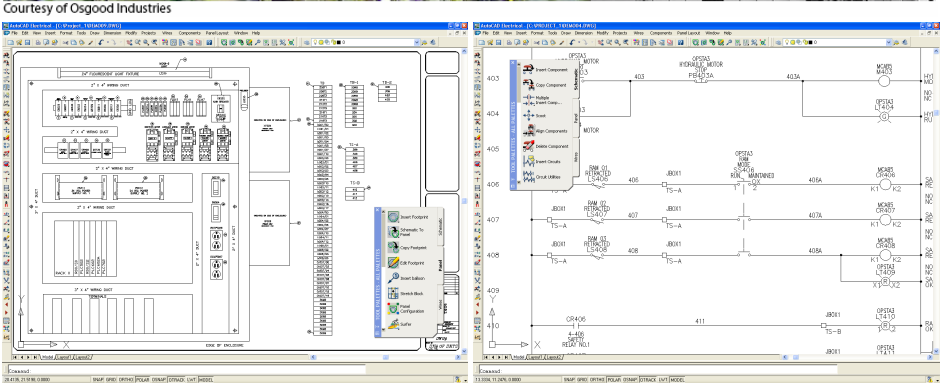

Autodesk Vault

Autodesk® Vault provides easy-to-use work-in-progress data management integrated with the design applications you use today. Included with Autodesk Inventor® Series, Autodesk Inventor Professional, AutoCAD® Mechanical, and AutoCAD® Electrical, Autodesk Vault addresses specific work-in-progress management problems such as poor design reuse and version control.

This easy-to-use data management tool makes work-in-process data more accessible and reusable while avoiding the versioning problems inherent in sharing files among workgroups. Most importantly, Autodesk Vault is integrated with your Autodesk design applications, making data management easier and more efficient than ever. This built-in data management application will help you automate key processes and securely manage work-in-process designs and changes.

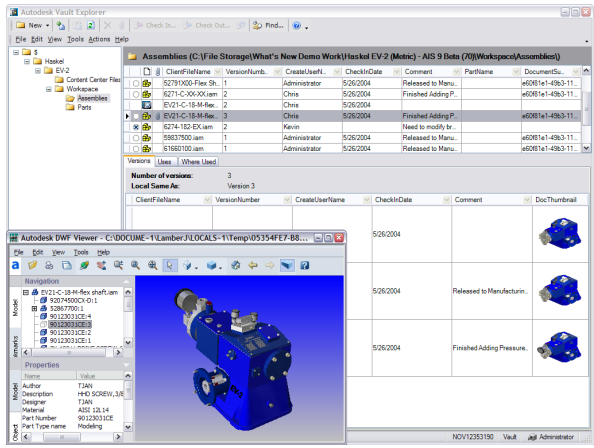

Simply stated—Autodesk Vault optimizes the investment you've made in your important design data.

Autodesk Streamline

Share your digital design data instantly, accurately, and for less cost with the Autodesk hosted project collaboration service for the manufacturing industry. Autodesk Streamline® is an easy-to-use project collaboration environment that helps you share design and project data with suppliers, customers and trading partners—anytime, anywhere.

Easy to install so you get a fast return on your technology investment, Autodesk Streamline software offers an effective way to connect your extended manufacturing team and improve communication across your entire supply chain. With accurate viewing and tracking capabilities to support design innovation, effective reuse of digital designs to reduce time to market, and better communication to minimize errors and enhance product quality, Autodesk Streamline helps improve business processes throughout your product lifecycle.

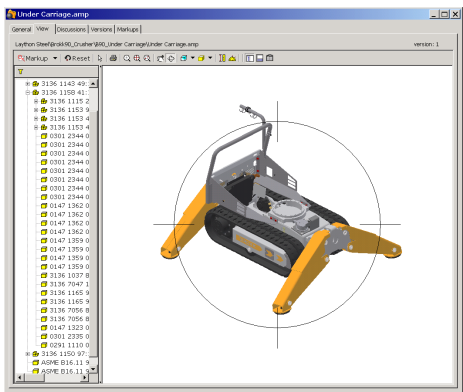

Autodesk DWF Viewer

Now you can view and print DWF™ (Design Web Format™) files without the original design application. Autodesk® DWF™ Viewer (formerly Autodesk® Express Viewer) is a small, free, downloadable application that you can use to view and print files in DWF—a fast, efficient way to distribute design data to anyone who needs it.

Conclusion

We hope you have enjoyed your 3D design experience. During this test drive, you had an opportunity to use Autodesk Inventor for

- Sketching
- 3D modeling
- Part drawing creation
- Adaptive design
- Movement simulation
- Assembly drawing creation
- Reusing 2D AutoCAD drawings
- Weldment design
- Sheet metal design

However, this only scratches the surface of the true capabilities of Autodesk Inventor. You now have 30 days to continue using Autodesk Inventor software before your trial version expires.

Autodesk supports their products through Autodesk Authorized Resellers, industry experts who offer consultation, training, support, and other related services to help you meet your business needs. We encourage you to contact an Autodesk Authorized Reseller or your local Autodesk representative to learn how Autodesk manufacturing solutions can help you get to market faster and at a lower cost.

To find an Authorized Autodesk Reseller in your area, call 800-964-6432 (United States and Canada only) or visit our website at **www.autodesk.com/reseller**.

The Autodesk Inventor Team

Notes